Florida Department of Transportation

RON DESANTIS
GOVERNOR

801 N. Broadway Avenue
Bartow, Florida 33830-3809

JAMES M. DRIGGERS, JR., P.E.
DISTRICT ONE SECRETARY

MEMORANDUM

DATE: April 16, 2026

TO: Jimmy Vilce, P.E., CPM, FDOT Contract Manager
Michelle Rutishauser, FDOT Project Manager

FROM: Bruce W. Landis, P.E., AICP, Landis Evans + Partners, Project Manager

SUBJECT: **FPID 444857-1 Palmetto Trails Network PD&E Study in Manatee County Southern Section Recommended Alternative**

This memorandum communicates the Recommended Alternative for the Southern Section of the Palmetto Trails PD&E Study. This recommendation has emerged per the Comparative Alternatives Evaluation of the study alignments and facilities and the Evaluation Matrix.

BACKGROUND

The Middle Section of the Palmetto Trails Network PD&E Study connects the MCAT transfer station on 7th Avenue W to the Dr. Martin Luther King, Jr. Park, and continues to Coach Eddie Shannon Park (formerly known as Lincoln Park). The Northern Section of the Study connects Coach Eddie Shannon Park to Washington Park in the north. **Figure 1** shows the Middle and Northern Sections' Study Segments as a yellow line. The alignment of these Sections for advancement to the final public hearing (or workshop, depending on the Class of Action) has long been established, and their alternative facilities had been recommended by Landis Evans to the District on August 30, 2023, a copy of which is in Appendix A.

The Southern Section of Manatee County Better Utilizing Investments to Leverage Development (BUILD)/Rebuilding American Infrastructure with Sustainability and Equity (RAISE)/Transportation, Housing and Urban Development (T-HUD) Grants' suggested alignment extends the Palmetto Trails Network PD&E Study corridor from Dr. Martin Luther King, Jr. Park south to the Manatee River, specifically to the intersection of Business U.S. 41 and Riverside Drive (**Figure 2**).

An initial review of the grant applications' proposed alignment suggested there may be some insurmountable right of way or permitting challenges. Consequently, additional alignments were evaluated as alternatives to the grant applications' proposed alignment. Following engineering and environmental study, and initial community feedback from a February 2025 public meeting – and after

extensive discussions with the City of Palmetto, and in consultation with Manatee County, the PD&E Study team removed two southern segments, SA-1 and SB-1, from the PD&E study's corridor per the City of Palmetto's desire. The resulting PD&E Study evaluated segments are illustrated in **Figure 3** and described in **n**

Table 1.

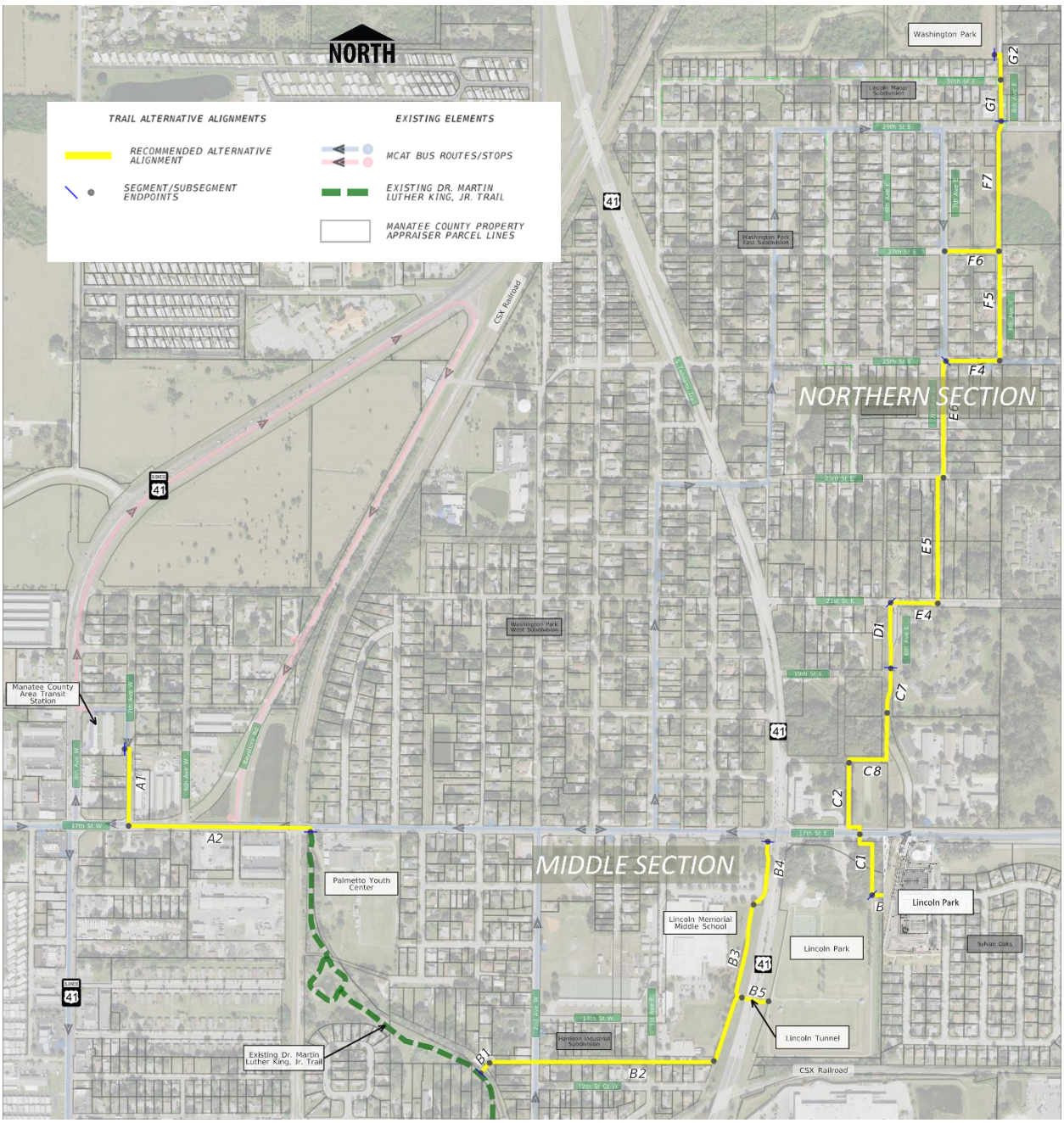

Figure 1 Middle and Northern Sections of the Palmetto Trails Network Study

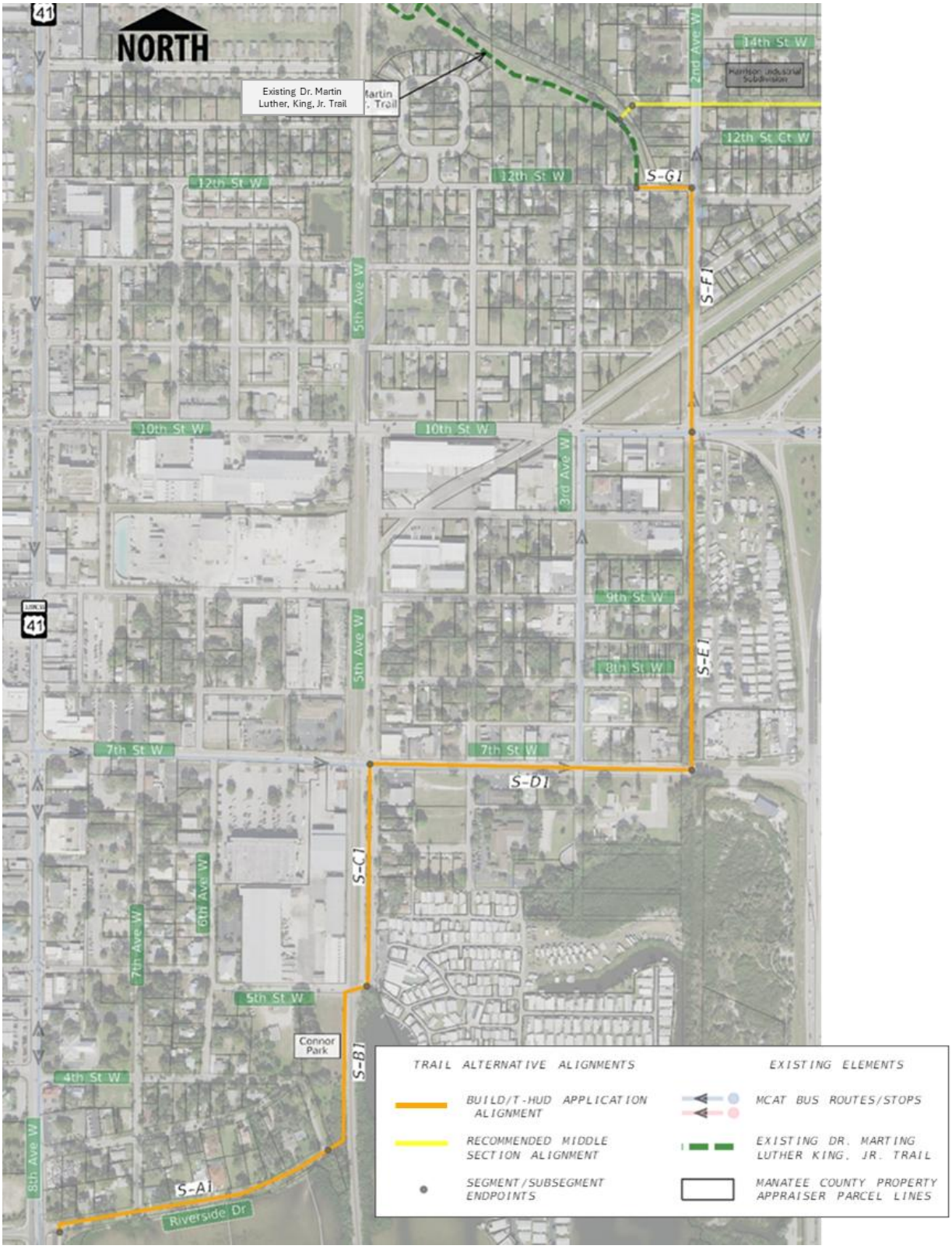

Figure 2 Southern Section as Envisioned in BUILD/RAISE/T-HUD Grant Applications

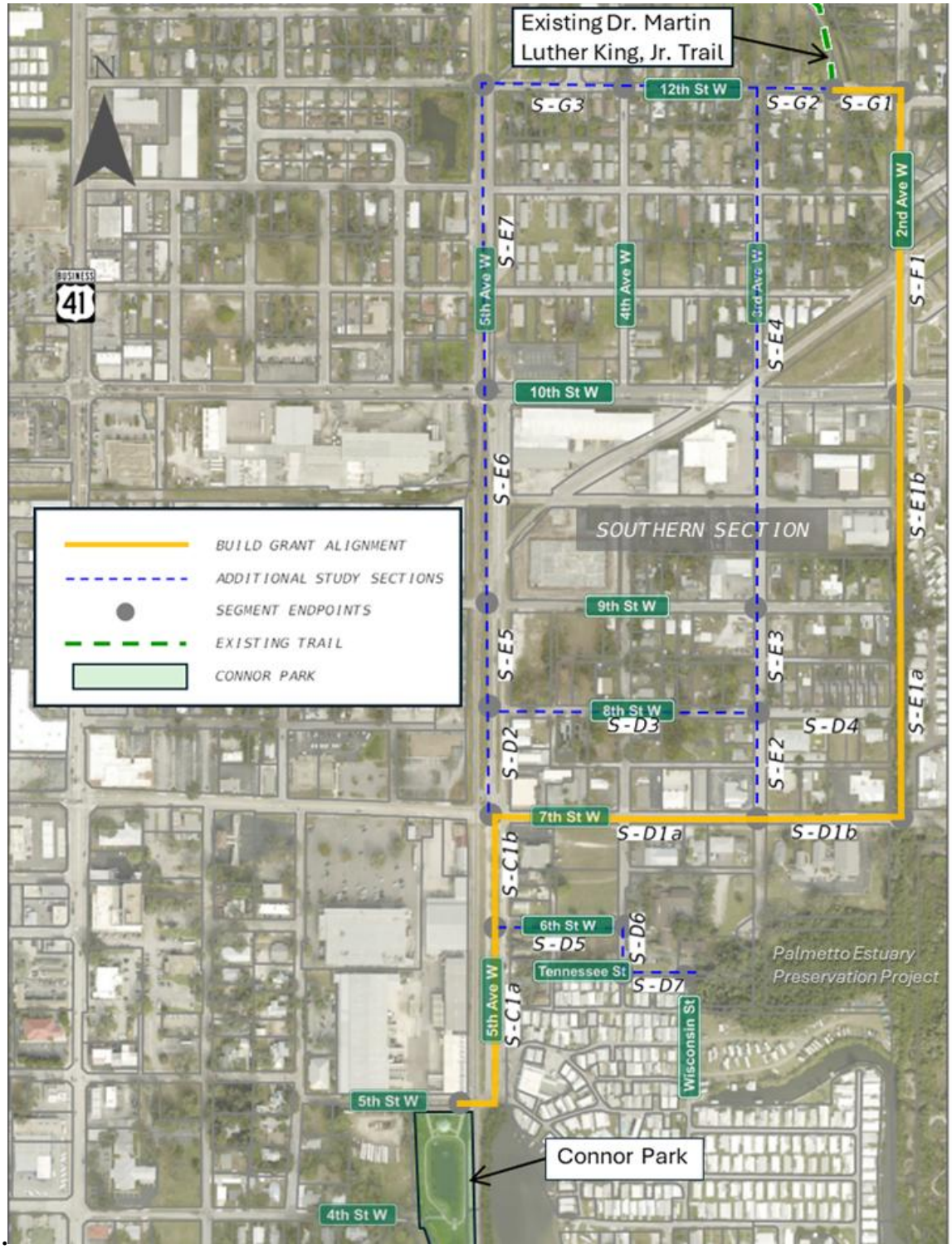

Figure 3 Segments Evaluated within Southern Section

TABLE 1 Southern Segment Descriptions

Southern Section	Segment S-C	S-C1a	Along 5th Ave W from Connor Park to 6th St W
		S-C1b	Along 5th Ave W from 6th St W to 7th St W
	Segment S-D	S-D1a	Along 7th St W from 5th Ave W to 3rd Ave W
		S-D1b	Along 7th St W from 3rd Ave W to 2nd Ave W
		SD-2	Along 5th Ave W from 7th St W to 8th St W
		S-D3	Along 8th St W from 5th Ave W to 3rd Ave W
		S-D4	Along 8th St W from 3rd Ave W to 2nd Ave W
		S-D5	Along 6th St W from 5th Ave W to 4th Ave W
		S-D6	Along 4th Ave W from 6th St W to Tennessee St
		S-D7	Along Tennessee St from 4th Ave W to Wisconsin St
	Segment S-E	S-E1a	Along Carr Drain/2nd Ave W right of way from 7th St W to 9th St W
		S-E1b	Along Carr Drain/2nd Ave W right of way from 9th St W to 10th St W
		S-E2	Along 3rd Ave W from 7th St W to 8th St W
		S-E3	Along 3rd Ave W from 8th St W to 9th St W
		S-E4	Along 3rd Ave W from 9th St W to 12th St W
		S-E5	Along 5th Ave W from 8th St W to 9th St W
		S-E6	Along 5th Ave W from 9th St W to 10th St W
		S-E7	Along 5th Ave W from 10th St W to 12th St W
	Segment S-F	S-F1	Along 2nd Ave W from 10th St W to 12th St W
	Segment S-G	S-G1	Along 12th St W from Dr. Martin Luther King, Jr. Trail to 2nd Ave W
		S-G2	Along 12th St W from 3rd Ave W to Dr. Martin Luther King, Jr. Trail
		S-G3	Along 12th St W from 5th Ave W to 3rd Ave W

The following section presents the Alternatives Evaluation Matrix and the Recommended Alternative:

RECOMMENDED SOUTHERN SECTION ALTERNATIVE FOR PRESENTATION AT PUBLIC HEARING/WORKSHOP

The Recommended Alternative is described from south to north as follows:

- Segment S-C1a: 12-ft shared use path in the median of 5th Avenue W
- Segment S-C1b: 12-ft shared use path in the median of 5th Avenue W
- Segment S-D2: 12-ft shared use path on west side of 5th Avenue W
- Segment S-E5: 8-ft shared use path on the west side of 5th Avenue W
- Segment S-E6:
    - Southern portion: 12-ft shared use path on the west side of 5th Avenue W
    - Northern portion: 10-ft shared use path on the west side of 5th Avenue W (would require narrowing existing roadway pavement)

- Segment S-E7: Shared travel lanes with shared lane markings and speed cushions along with 6-ft sidewalks on 5th Avenue W
- Segment G3: Shared travel lanes with shared lane markings and speed cushions along with 6-ft sidewalks on 12th Street W
- Segment G2: Shared travel lanes with shared lane markings and speed along with 6-ft sidewalks on 12th Street W

Three additional segments, S-D5, S-D6, and S-D7 were recommended by the Palmetto Community Redevelopment Agency (CRA) to connect the primary alignment to the Palmetto Estuary Preservation Project area. The CRA noted that they have acquired the parcel adjacent to S-D5 (6th Street W) and S-D6 (4th Avenue W) and it could provide space for a trail facility. Segment S-D7 would make use of the very narrow right of way along Tennessee Street and be served by shared travel lanes.

The location of the Recommended Alternative segments (i.e., the *alignment* of the Southern Section's Recommended Alternative) is shown in **Figure 4**.

Table 2 summarizes the PD&E team's comparison analysis within an Evaluation Matrix format. The criteria used in this matrix are the same as those which were used and approved by FDOT in the Evaluation Matrix for the Middle and Northern Sections. The criteria can be found in Appendix A. The Recommended Alternative for the Southern Section is highlighted in columns of light green in the Evaluation Matrix. The proposed typical sections for the Southern Section Recommended Alternatives are included in Appendix B.

Figure 4 Southern Section - Recommended Alternative

TABLE 2 Evaluation Matrix- Southern Section

Palmetto Trails Network Plan - Alternatives Evaluation Matrix DRAFT 2/12/2026

Evaluation Criteria	No-Build Alternative	Build Alternatives																												
		Southern Section Alignments																												
		Segment C								Segment D								Segment E							Segment F		Segment G		
		S-C1a				S-C1b				S-D1a		S-D1b		S-D2	S-D3	S-D4	S-D5 > S-D6 > S-D7	S-E1a		S-E1b		S-E2	S-E3 > S-E4	S-E5 > S-E6 > S-E7	S-F1		S-G1	S-G2	S-G3
		Typ. Sec. 3A S	Typ. Sec. 3B S	Typ. Sec. 3C S	Typ. Sec. 3D S	Typ. Sec. 3A S	Typ. Sec. 3B S	Typ. Sec. 3C S	Typ. Sec. 3D S	Typ. Sec. 4A S	Typ. Sec. 4B S	Typ. Sec. 4A S	Typ. Sec. 4B S	Typ. Sec. 7 S	Typ. Sec. 10 S	Typ. Sec. 10 S	Typ. Sec. 12 S, 13 S, 14 S	Typ. Sec. 5A S	Typ. Sec. 5B S	Typ. Sec. 5A S	Typ. Sec. 5B S	Typ. Sec. 10 S	Typ. Sec. 10 S	Typ. Sec. 8-S, 11 S, 9S	Typ. Sec. 6A S	Typ. Sec. 6B S	Typ. Sec. 10 S	Typ. Sec. 10 S	Typ. Sec. 10 S
Purpose and Need: Facility Purpose(s)																														
Lateral Separation from Roadway (L/M/ H)	L	M	L	H	M	M	L	H	M	M	M	M	M	H	L	L	L	H	H	H	H	L	L	M/H/L	M	L	L	L	L
Lateral Separation from Homes/Businesses (L/M/ H)	H	H	H	H	H	H	H	H	H	M	M	M	M	H	L	M	M/H/L	M	M	M	M	M	L	H	M	M	L	L	L
Shade (L/M/ H)	L	M	M	L	M	M	M	L	M	L	L	L	L	M	M	L	L	M	M	M	M	L	L	L	M	L	L	M	M
Service to Community Destinations (L/M/ H)	L	H	H	H	H	M	M	M	M	H	H	H	H	L	H	M	M	H	H	M	M	M	M	L	M	M	H	H	M
School Connectivity/Student Mobility (L/M/H)	L	L	L	L	L	L	L	L	L	L	L	L	L	L	L	L	L	M	M	M	M	M	M/H	L	H	H	H	H	H
Connections to Transit Stops (L/M/H)	L	L	L	L	L	M	M	M	M	H	H	H	H	M	L	L	L	M	M	M	M	M	M	L/M/M	H	H	M	L	L
Trail Visibility/Security (L/M/ H)	L	H	H	H	H	H	H	H	H	H	H	H	H	M	H	M	M	L	L	L	L	H	H	M	H	H	M	H	H
Trail System Continuity (L/M/ H)	L	H	M	H	H	H	M	H	H	H	M	H	M	H	L	L	L	H	H	H	H	L	L	H/H/L	H	L	L	L	L
Public Feedback																														
Public Desirability (L/M/ H) [see note 3]	L	M*	M	L	M*	M*	M	L	M*	M	M	M	M	M	M	M	H	M	M	M	M	M	M	M	M	M	M	M	M
Social Impacts																														
Parcels Impacted [see note 4]	0	0	0	0	0	0	0	0	0	5	0	1	0	0	0	0	0/1/1	0	0	0	0	0	0/9	0	1	0	2	3	15
Anticipated R/W Acquisition (acres) [see note 4]	0	0	0	0	0	0	0	0	0	0.182	0	0.101	0	0	0	0	0.044	0	0	0	0	0	0/0.056	0	0.021	0	0.025	0.023	0.070
Number of Potential Section 4(f) Resources	0	0	0	0	0	0	0	0	0	0	0	0	0	0	0	0	0	0	0	0	0	0	0	0	0	0	1	1	0
Potential Natural/Cultural Environmental Effects																														
Archaeological Sites Potentially Affected	0	0	0	0	0	0	0	0	0	0	0	0	0	0	0	0	0	0	0	0	0	0	0	0	0	0	0	0	0
Historical Sites Potentially Affected	0	0	0	0	0	0	0	0	0	0	0	0	0	0	3	2	0	0	0	0	0	0	1	0	1	0	0	0	0
Floodplains (acres) Impacted [See note 5]	0	0	0	0	0	0	0	0	0	0	0	0	0	0	0	0	0	0.08	0.15	0.19	0.36	0	0	0	0	0	0	0	0
Wetlands (acres) Impacted	0	0	0	0	0	0	0	0	0	0	0	0	0	0	0	0	0	0	0	0	0	0	0	0	0	0	0	0	0
Other Surface Waters (acres) Impacted	0	0	0	0	0	0	0	0	0	0	0	0	0	0	0	0.001	0	0.11	0.2	0.34	0.64	0	0	0	0	0	0	0	0
Wildlife/Threatened and Endangered Species Occurrence Potential (L/M/H)	L	L	L	L	L	L	L	L	L	L	L	L	L	L	L	L	L	L	L	L	L	L	L	L	L	L	L	L	L
Potential Physical Effects																														
Utility Agency Owners impacted	0	5	0	0	5	5	0	0	5	6	6	6	6	4	4	3	3/2/2	3	4	4	5	4	5/3	4/4/2	4	4	3	3	3
Utility Relocations	0	5	0	0	5	5	0	0	5	6	6	6	6	3	4	3	3/2/2	3	4	4	5	4	5/3	4/4/2	4	4	3	3	3
Contamination Sites (M/H Levels of contamination only)	0	2	0	0	2	2	0	0	2	2	2	1	1	0	0	0	0/1/1	2	2	1	1	0	0/1	0	1	1	0	0	0
Purpose and Need: Safety																														
Number of Driveway or Parking Lot (Business or Residential) Crossings (Only consider new construction)	0	0	0	0	0	0	0	0	0	5	5	1	1	0	7	3	0/0/1	0	0	0	0	1	2/7	0	1	0	0	6	10
At grade Street and R/R Crossings	0	3	3	3	3	1	1	1	1	2	2	0	0	0	3	0	2/0/1	1	1	1	1	3	4/3	1/2/2	2	2	0	0	3
Estimated Project Costs (per Month 2025 LRE) [see notes 6 & 7]																														
Construction	$0	$ 119,000	$ 6,000	$ 4,000	$ 132,000	$ 62,000	$ 4,000	$ 3,000	$ 70,000	$ 353,000	$ 156,000	$ 190,000	$ 84,000	$ 62,000	$ 98,000	$ 53,000	$ 67,000	$ 3,297,000	$ 111,000	$ 9,419,000	$ 317,000	$ 39,000	$ 200,000	$ 331,000	$ 172,000	$ 8,000	$ 27,000	$ 27,000	$ 98,000
Design & Construction Engineering and Inspection (27% of Construction Cost)	$0	$ 32,000	$ 2,000	$ 1,000	$ 36,000	$ 17,000	$ 1,000	$ 1,000	$ 19,000	$ 95,000	$ 42,000	$ 51,000	$ 23,000	$ 17,000	$ 26,000	$ 14,000	$ 18,000	$ 890,000	$ 30,000	$ 2,543,000	$ 86,000	$ 11,000	$ 54,000	$ 89,000	$ 46,000	$ 2,000	$ 7,000	$ 7,000	$ 26,000
Right-of-Way Acquisition (Provided by FDOT)	$0	$ -	$ -	$ -	$ -	$ -	$ -	$ -	$ -	$ -	$ -	$ -	$ -	$ -	$ -	$ -	$ -	$ -	$ -	$ -	$ -	$ -	$ -	$ -	$ -	$ -	$ -	$ -	$ -
Wetland Mitigation	$0	$ -	$ -	$ -	$ -	$ -	$ -	$ -	$ -	$ -	$ -	$ -	$ -	$ -	$ -	$ -	$ -	$ -	$ -	$ -	$ -	$ -	$ -	$ -	$ -	$ -	$ -	$ -	$ -
Species Mitigation/Relocation	$0	$ -	$ -	$ -	$ -	$ -	$ -	$ -	$ -	$ -	$ -	$ -	$ -	$ -	$ -	$ -	$ -	$ -	$ -	$ -	$ -	$ -	$ -	$ -	$ -	$ -	$ -	$ -	$ -
Estimated Total Costs	$0	$ 151,000	$ 8,000	$ 5,000	$ 168,000	$ 79,000	$ 5,000	$ 4,000	$ 89,000	$ 448,000	$ 198,000	$ 241,000	$ 107,000	$ 79,000	$ 124,000	$ 67,000	$ 85,000	$ 4,187,000	$ 141,000	$11,962,000	$ 403,000	$ 50,000	$ 254,000	$ 420,000	$ 218,000	$ 10,000	$ 34,000	$ 34,000	$ 124,000

Note:
1. The light green highlight represents the Recommended Alternative based on Subtask 4.17.1 evaluation results and route continuity.
2. The dark green highlight represents the most favorable response to the criteria (e.g. L for low impact to endangered species, H for High potential to provide shade).
3. Public Desirability was based on feedback from public meetings and charrettes.
4. Parcels impacted and anticipated R/W acquisition values were based on the property appraiser, assuming the roadway centerline is synonmous with the centerline of the property appraiser right of way lines and not on the apparent right of way shown in the Typical Sections.
5. Floodplains Impacted only encompasses floodplain which requires mitigation.
6. The costs shown do not reflect the total project cost (e.g. lighting, trail amenities, tunnel enhancements, landscaping).
7. Utility costs are not included as a part of this PD&E's scope (section 4.9.1).
* Anticipated response based on dialogue with City of Palmetto

Appendix A

August 30, 2023 Memo

FPID 444857-1 Palmetto Trails Network PD&E Study in Manatee County Recommended Alternative

Florida Department of Transportation

RON DESANTIS
GOVERNOR

801 N. Broadway Avenue
Bartow, Florida 33830-3809

L.K. NANDAM
DISTRICT ONE SECRETARY

MEMORANDUM

DATE: August 30, 2023

TO: Patrick Bateman, P.E., FDOT Contract Manager
Abra Horne, FDOT Environmental Administrator
Michelle Rutishauser, FDOT Project Manager
Gordon Mullen, FDOT Environmental Project Manager

FROM: Bruce W. Landis, P.E., AICP, Landis Evans + Partners, Project Manager

SUBJECT: **FPID 444857-1 Palmetto Trails Network PD&E Study in Manatee County Recommended Alternative**

This memorandum communicates the Recommended Alternative for the Middle and Northen Sections for presentation at a public hearing. This Recommended Alternative has emerged per the Comparative Alternatives Evaluation of the study alignments and facilities presented in the May 23, 2022 Recommended Alignment memorandum, and the Typical Section Analysis submitted on February 1st, 2023, initially approved on March 28, and finalized following subsequent meetings, engineering and environmental analyses.

The following sections present the Recommended Alternative and the Alternatives Evaluation Matrix summarizing our Comparative Alternatives Evaluation.

RECOMMENDED ALTERNATIVE FOR PRESENTATION AT PUBLIC HEARING

The Recommended Alternative is described as follows:

- Segment A1: 10-ft Shared use path (8-ft min.) on the southbound (west) side, and a 6-ft sidewalk on the northbound (east) side
- Segment A2: 12-ft Shared use path (10-ft min.)
- Segment B1 and B6: Prefabricated steel truss bridge (Segment B6 is being constructed by the County)
- Segment B2, B3, B4: 12-ft Shared use path (10-ft min. for segment B4)
- Segment B5: Lincoln Tunnel enhancements
- Segment C1, C2, C8, C7: 12-ft Shared use path (10-ft min. for segments C1, C2, C8)
- Segment D1: 10-ft Shared use path

- Segment E4: Shared travel lanes with shared lane markings and speed cushions. 6-ft - 8-ft sidewalks
- Segment E7: 12-ft Shared use path
- Segment E6: Shared travel lanes with shared lane markings and speed cushions. 6-ft - 8-ft sidewalks
- Segment F4: 12-ft Shared use path (10-ft min.)
- Segment F5: Shared travel lanes with shared lane markings and speed cushions. 6-ft - 8-ft sidewalks
- Segment F6, F7: 12-ft Shared use path (10-ft min.)
- Segment G1, G2: 10-ft Shared use path

The locations of the Recommended Alternative segments are shown in Figure 1 and Figure 2. Figure 3 displays all the segments analyzed as presented in the May 23, 2022 Recommended Alignment memorandum. Table 1 provides a description of each of these segments analyzed.

Table 2 summarizes our comparison analysis in an Evaluation Matrix. The recommended alternative is highlighted in light green. The typical sections for these alternatives are attached at the end of this document.

FIGURE 1 Recommended Alternative - Middle Section

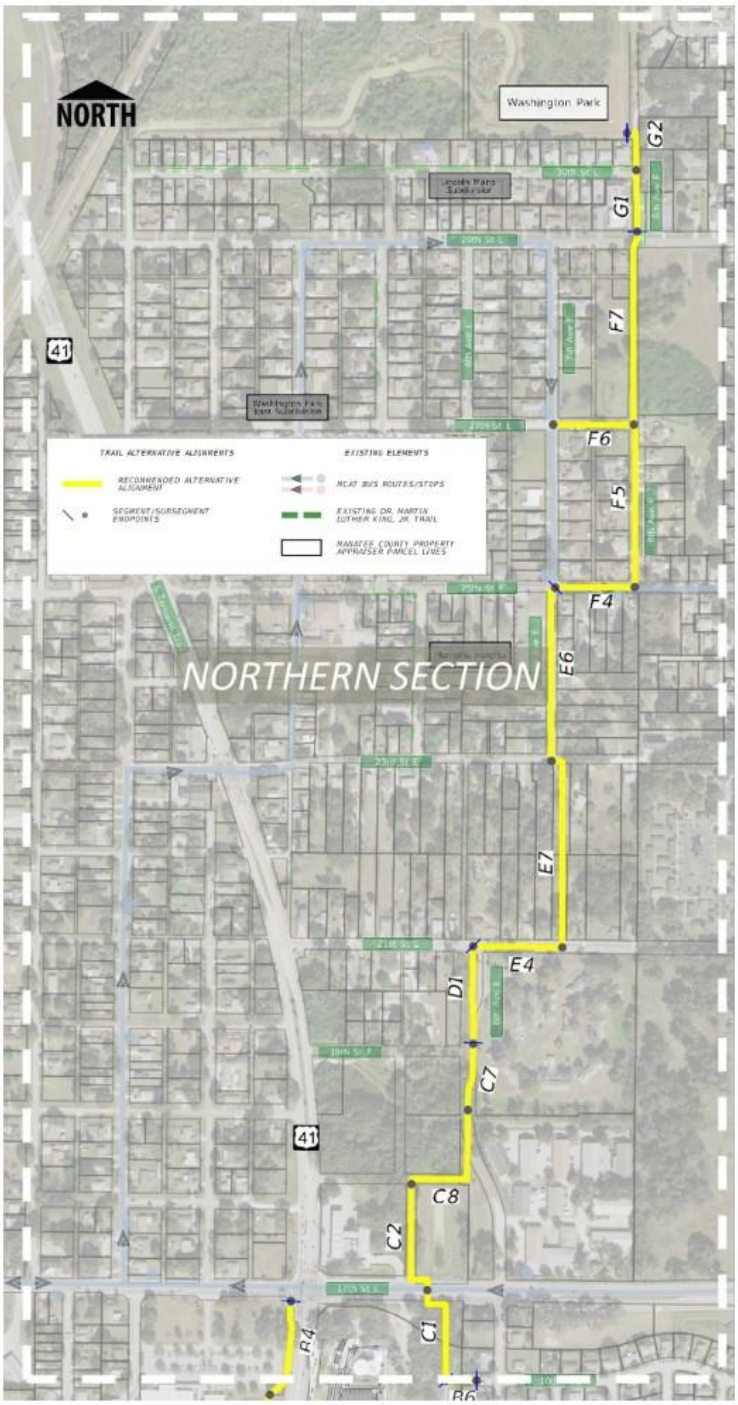

FIGURE 2 Recommended Alternative - Northern Section

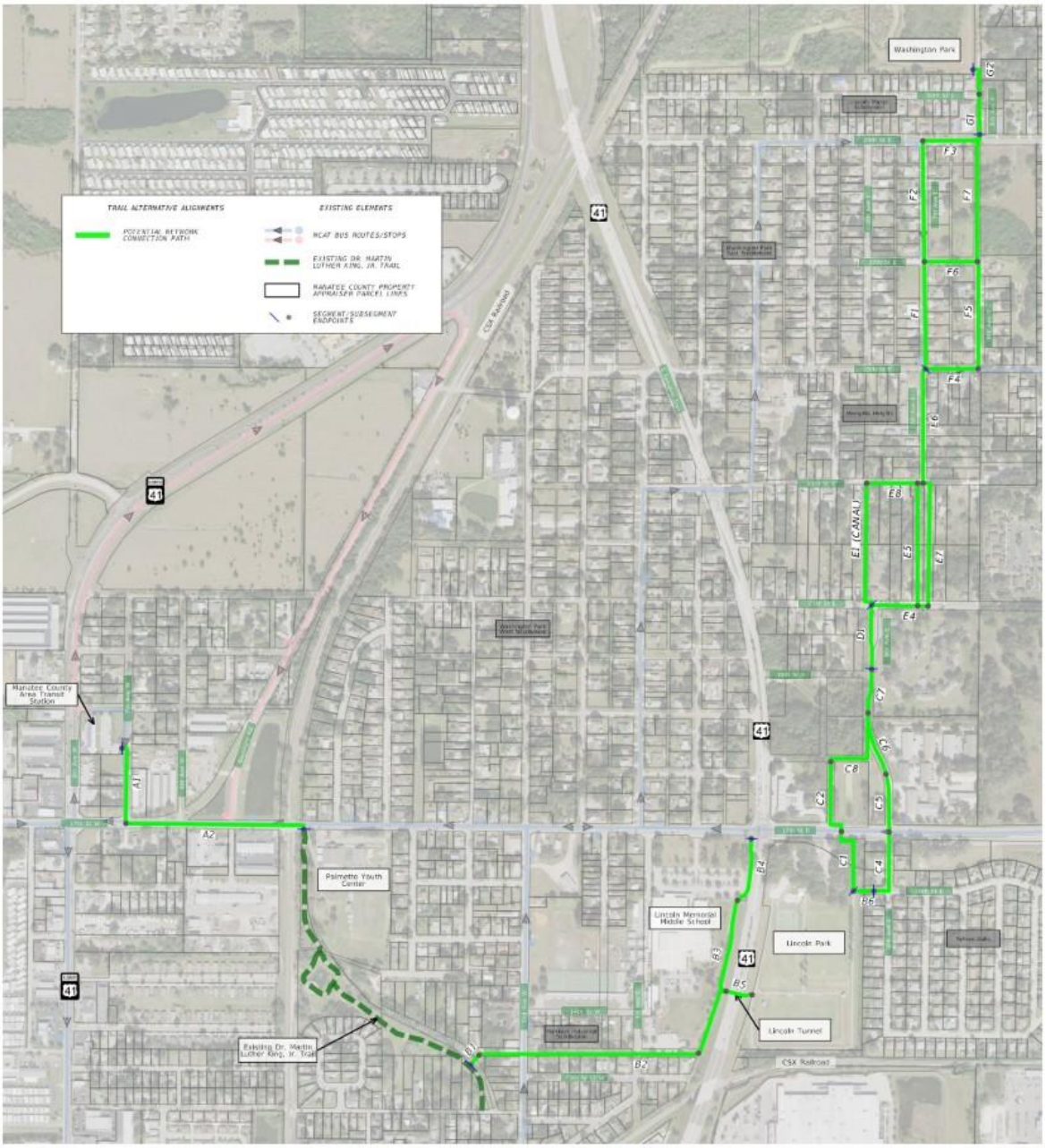

FIGURE 3 Recommended Alignments for Study

TABLE 1 Segment Descriptions

Sector	Segment	Sub-Segment	Sub-Segment Description
Middle Sector	Segment A	1	(Project Start) Along 7th Ave W from MCAT Station to 17th St W
		2	Along 17th St W from 7th Ave W to Palmetto Youth Center
	Segment B	1	Bridge section from existing Dr. Martin Luther King, Jr. Trail to 13th St W corridor
		2	Along 13th St W corridor from east end of bridge section to the west side of the U.S. 41 Embankment
		3	Along west side of U.S. 41 Embankment from 13th St W corridor to the southeast corner of the Lincoln Middle School parking lot
		4	Parallel to U.S. 41 from the southeast corner of the Lincoln Middle School parking lot to 17th St W
		5	Through Lincoln Tunnel underneath U.S. 41
		6	Bridge section from an existing trail within Lincoln Park connecting to the west end of 16th St E
Northern Sector	Segment C	1	Within Lincoln Park from existing trail at the west end of bridge section B6 to 17th St E
		2	Along undeveloped right-of-way north from 17th St E to right-of-way branch between C1 and C8
		3	Follows undeveloped right-of-way north to 19th St E then turns east and continues to undeveloped 6th Ave E extension
		4	Along 16th St E and 6th Ave E from the east end of bridge section B6 to 17th St E
		5	Along developed section of 6th Ave E from 17th St E to the end of the paved roadway
		6	Along undeveloped section of 6th Ave E from the end of the paved roadway to the change in right-of-way
		7	Along undeveloped section of 6th Ave E parallel to canal from the change in right-of-way to the paved roadway at 19th St E intersection
		8	Along undeveloped right-of-way from the north end of C2 extending east and then north along the undeveloped 6th Ave E extension
	Segment D	1	Along 6th Ave E paved section from 19th St E extension to 21st E
	Segment E	1	Along existing canal from 21st St E to 23rd St E
		2	Along exsting canal from 23rd St E to 25th St E through several parcels
		3	Along 25th St E from 6th Ave E to 7th Ave E
		4	Along 21st St E from 6th Ave E to south end of either E5 or E7, depending on the route taken
		5	Through two vacant parcels just to the west of what would be the extension of 7th Ave E
		6	Along 7th Ave E from 23rd St E to 25th St E
		7	Through two vacant parcels just to the east of what would be the extension of 7th Ave E
	Segment F	4	25th St E from 7th Ave E to 8th Ave E
		5	Along 8th Ave E from 25th St E to the end of the developed section of the roadway intersecting the undeveloped extension of 27th St E
		6	Along undeveloped right-of-way for the 27th St E extension from 7th Ave E to the end of the developed roadway along 8th Ave E
		7	Along undeveloped right-of-way for the 8th Ave E extension from the end of the paved roadway for 8th Ave E to 29th St E
	Segment G	1	Along 8th Ave E from 29th St E to the end of the paved roadway
		2	Along 8th Ave E from the end of the paved roadway to the entrance of Washington Park (Project Terminus)

ALTERNATIVES EVALUATION

To arrive at the Recommended Alternatives, the alternative alignments and facilities described in the May 23, 2022 Recommended Alignment memorandum, and the Typical Section Analysis submitted on February 1st, 2023, and initially approved on March 28 were evaluated. Modifications were made to a few of the (off-system) typical sections after follow-up meetings held with the County and FDOT and subsequent engineering analysis. The typical sections attached at the end of this document showcase these final alternatives. The Alternatives Evaluation Matrix, Table 2, summarizes our evaluation.

The alternatives which represent the most benefits and least impacts were generally selected as the Recommended Alternative (highlighted in green in Table 2). Several segments only had one option. The singular options were automatically selected due to being the only feasible option identified or other alternatives being found infeasible during the prior alignment refinement stage.

The Evaluation Matrix reflects various factors, separated into criteria categories, used in the Comparative Alternatives Evaluation to compare the potential alternatives. Each of the criterion is described below:

Facility Purpose

This category includes factors that relate to the purpose and need of the project as identified in the BUILD/RAISE grant applications by the local sponsoring agencies and the ETDM programming screening as well as feedback from local agencies and stakeholders from the various public engagement activities and questionnaire response. The factors which emerged are listed below:

1. Lateral Separation from Roadway
2. Lateral Separation from Homes/Businesses
3. Shade
4. Trail Visibility/Security
5. Service to Community Destinations
6. School Connectivity/Student Mobility
7. Connections to Transit Stops
8. Trail System Continuity
9. Public Support Ranking (of initial alternatives)

Most of these factors were scored on a Low/Medium/High scale except for Public Support Ranking which was scored on a 1-5 scale, with 1 being the highest rank. This was tallied directly from received responses to the questionnaire at the January 27, 2022 and February 1, 2022 Public Workshops.

The purpose of the Palmetto Trails Network Plan is to reestablish multimodal, community connections throughout the City of Palmetto, Manatee County that were previously lost through the construction of US 41. Other goals include:

- Provide safe and viable travel options for the community to access area destinations.
- Support quality of life and economic objectives of the surrounding area.

The need for the proposed project is based on the following criteria:

- Area Wide Network / System Linkage: Regional Bicycle and Pedestrian Connectivity

  Facility purpose Factors 5 through 8 address this need criterion. These factors discuss elements of connection to key destinations, multimodal access, and system continuity.

- Safety: Provide Safe Multimodal Access to Destinations

  Facility purpose Factors 1 through 4 address this need criterion. These factors discuss elements of safety such as proximity to traffic and security features and elements of viability (not only feasibility but also potential for use by the community) such as shade and visibility of the trail. Viability also overlaps with Factors 5 through 8 but especially Factors 5 and 6, which describe connection to key destinations, a major indicator of the potential level of use of the facility.

- Social and Economic Demand: Enhance Quality of Life and Support Economic Development

  All nine evaluative factors provide a means for measuring the alternatives' contribution to this need. Facility purpose Factor 9 (Public Support Ranking) directly reflects the public workshop participants' perception of which initial alternatives would enhance their quality of life.

In summary, all nine of these factors support the overall purpose and need and additional goals of this project.

Social Impacts

This category includes factors, identified in the FDOT *PD&E Manual,* that impact property and property ownership.

Number of Parcels Impacted

These parcel counts are based on Manatee County parcel boundaries as shown on the Manatee County Property Appraiser website.

Anticipated R/W Acquisition

This criterion represents the total acreage of overlap between the alternatives' estimated footprint per the typical sections and the parcels through which they pass, as identified in the criterion above. It represents a rough estimate of the magnitude of right-of-way acquisition, in acres, that may be required.

Number of Potential Section 4(f) Resources

The amount of significant impact on properties protected by Section 4(f) of the U.S. Department of Transportation (USDOT) Act based on the results of the NRE, CSER, and CRAS reports.

Potential Natural/Cultural Environmental Impacts

This category includes factors, identified from the FDOT *PD&E Manual,* that impact the natural or cultural environment of the area.

Historical Sites Potentially Affected

Historical sites impacted by the alternatives were identified by review of historical aerial imagery as outlined in the CRAS.

Wetlands (acres) Impacted & Other Surface Waters (acres) Impacted

Approximate wetland and other surface water (OSW) locations were identified along the alternatives. Wetland impacts associated with the construction of this project can be mitigated pursuant to Section 373.4137 Florida Statutes (F.S.) to satisfy all mitigation requirements of Part IV, Chapter 373, F.S. and 33 U.S.C.S. 1344. Under Section 373.4137 F.S., mitigation of wetland impacts will be implemented by the purchase of mitigation bank credits from a SWFWMD-approved mitigation bank.

The design of the trail alternative for Segments F4 and G1 will need to include treatment mitigation for the swales being filled. This could potentially be addressed through the use of perforated pipe or by treating roadway runoff not currently treated within other network segments (e.g., F6, F7, etc.) within the watershed.

Potential Physical Effects

This category includes factors, identified from the FDOT *PD&E Manual,* that affect existing structures and land viability.

Utility Agency Owners (UAOs) Impacted

Utility Agency Owners within the corridor's vicinity were contacted to determine if there was any impact to their utilities as a result of the proposed alternatives.

Utility Relocations

Utility Agency Owners within the corridor were provided with the alternatives to markup utility locations and potential impacts. The values in the matrix represent the approximate number of relocations amongst the owners who reported involvement.

Contamination Sites (M/H Levels Only)

As identified in the FDOT *PD&E Manual*, historical aerial photograph reviews, topographic map reviews, a database search, FDEP and County file reviews, and a precursory site reconnaissance were all performed to identify and rank the potential contamination risk facilities along the alignment alternatives.

Safety

This category includes factors, identified from the FDOT *PD&E Manual* and the Purpose and Need, that would affect the safety of the potential facilities' users.

Number of Driveway or Parking Lot Crossings

This evaluation criterion was documented through field- and aerial imagery-based research as compared to the alignment segment location and alternatives.

At-grade Street and R/R Crossings

This evaluation criterion was documented through field- and aerial imagery-based research as compared to the alignment segment location and typical sections.

Estimated Project Costs

This category includes cost factors, as identified in the FDOT *PD&E Manual*, necessary for comparison of alternatives. These cost factors will be further refined/updated with the approval of the Recommended Alternative and creation of the Conceptual Plan thereof.

Construction Cost - Estimated based on the 2023 FDOT Long-Range Estimates (LRE) received August 15, 2023 from FDOT.

Design & Construction Engineering and Inspection (CEI) – Design costs were calculated as 15% of the Construction Cost while CEI was calculated as 12% of the Construction Cost per FDOT District 1 practice.

Utilities Relocation Cost – Not included per this PD&E's scope Task 4.9.1.

Right of Way Acquisition – An initial estimate of acquisition needs has been made by the District based upon preliminary right of way maps and data table which show the anticipated right of way acreage required per the property appraiser parcel lines and estimated right of way needs in the concept typical sections. Following the approval of the Recommended Alternative, concept plans for the Build Alternative that include the parcel identification number, existing right of way lines, proposed right of way lines and acreage of property required will be submitted to FDOT. The Department will refine the estimate for right of way acquisition, and cost estimates for relocations and business damages, if any, as needed.

Wetland Mitigation – Estimated cost to mitigate impacts to wetland by purchasing credits at available wetland mitigation banks.

Table 3 displays the sources and analysis tools that were used to determine the comparison values of the criteria presented in the matrix. It should be noted that the recommended alternatives selected for Segments A and C had a lower Public Support Ranking but more positive comparison values for other evaluation factors. In the case of Segment A, the alternative recommended was developed after the public workshop but the public generally favored in-pavement options and sidewalks versus a shared use path

facility type so this alternative would score similar to Alternative 1A. This alternative is recommended due to the desire to provide a shared use path throughout the corridor, where possible, and minimize right-of-way needed. For Segment C, the public preferred the option with a more direct connection to Sylvan Oaks with a route along a roadway as opposed to a more circuitous route surrounded by vegetation. However, the alternative recommended avoids the need for right-of-way acquisition and addresses the public concern for having a trail "in their front yards". Both recommended alternatives are lower in cost than the publicly favored alternatives.

Table 2 Evaluation Matrix

Evaluation Criteria (See Table 4.17b for sources of criteria)	No-Build Alternative	Build Alternatives (Refer to Figures 4.17A and 4.17B for segment maps)															
		Middle Sector Alternatives							Northern Sector Alternatives								
		Segment A					Segment B		Segment C			Segment D	Segment E		Segment F		Segment G
		A1 Facility Alternatives				A2	B6 Bridge (See Note 7)	B1 > B2 > B3 > B4 > B5	C1 > C2 > C8 > C7	C4 > C5 (a) > C6 > C7	C4 > C5 (b)> C6 > C7	D1	E4 > E5 > E6	E4 > E7 > E6	F6	F4 > F5 > F7	G1 > G2
		Typ. Sec. 1A	Typ. Sec. 1B	Typ. Sec. 1C	Typ. Sec. 1D	Typ. Sec. 2	Typ. Sec. 3	Typ. Sec. 3-7	Typ. Sec. 8, 11	Typ. Sec. 8-11	Typ. Sec. 8-11	Typ. Sec. 12	Typ. Sec. 13-15	Typ. Sec. 13-15	Typ. Sec. 8	Typ. Sec. 8,16,17	Typ. Sec. 18,19
Purpose and Need: Facility Purpose(s) (See note 2)																	
Lateral Separation from Roadway (L/M/H)	L	M	M	L	L	M	H	H	H	M	M	M	L	L	H	M	M
Lateral Separation from Homes/Businesses (L/M/H)	H	L	L	M	M	H	H	M	H	M	M	H	H	H	H	M	H
Shade (L/M/H)	L	L	L	L	L	L	H	M	H	M	M	L	M	M	M	M	M
Trail Visibility/Security (L/M/H)	L	H	H	H	H	H	L	L	L	M	M	M	M	M	M	M	H
Service to Community Destinations (L/M/H)	L	H	H	H	H	H	H	H	H	H	H	H	M	M	M	M	H
School Connectivity/Student Mobility (L/M/H)	L	L	L	L	L	L	H	H	H	H	H	H	M	M	M	M	M
Connections to Transit Stops (L/M/H)	L	H	H	H	H	H	L	L	L	M	M	L	L	L	M	M	M
Trail System Continuity (L/M/H)	L	H	H	M	M	H	H	H	H	H	H	H	M	M	H	H	H
Public Support Ranking (1 - high, 5-low)	-	4	-	1.5	1.5	-	-	-	2	1	1	-	1.75	1.75	-	1.25	-
Social Impacts																	
Parcels Impacted	0	2	2	0	0	4	1	6	3	4	3	0	2	2	0	6	2
Anticipated R/W Acquisition (acres)	0	0.08	0.04	0	0	0.23	0	0.42	0.47	0.04	0.02	0	0.55	0.55	0	0.07	0.10
Number of Potential Section 4(f) Resources	0	0	0	0	0	2	3	2	3	1	1	0	0	0	0	0	1
Potential Natural/Cultural Environmental Effects																	
Archaeological Sites Potentially Affected	0	0	0	0	0	0	0	0	0	0	0	0	0	0	0	0	0
Historical Sites Potentially Affected	0	0	0	0	0	0	1	1	0	1	1	0	0	0	0	0	0
Floodplains (acres) Impacted	0	0	0	0	0	0	0	0	0	0	0	0	0	0	0	0	0
Wetlands (acres) Impacted	0	0	0	0	0	0	0	0	0	0	0	0	0.33	0.38	0.22	0.66	0
Other Surface Waters (acres) Impacted	0	0	0	0	0	0.02	0.11	0	0.65	0.35	0.35	0.24	0.01	0.01	0	0	0.03
Wildlife/Threatened and Endangered Species Occurrence Potential (L/M/H) - See note 2	L	L	L	L	L	L	L	L	L	L	L	L	L	L	L	L	L
Potential Physical Effects																	
Utility Agency Owners impacted	0	3	3	3	3	5	4	4	5	6	6	4	4	4	3	4	5
Utility Relocations	0	3	3	3	3	5	4	4	5	6	6	5	4	4	3	4	5
Contamination Sites (M/H Levels Only)	0	0	0	0	0	1	0	1	1	0	0	0	0	0	0	0	0
Purpose and Need: Safety																	
Number of Driveway or Parking Lot (Business or Residential) Crossings (Only consider new const)	0	2	3	3	3	1	0	0	0	3	3	0	8	8	0	13	1
At-grade Street and R/R Crossings	0	1	1	1	1	3	0	3	1	2	2	1	3	3	0	3	1
Estimated Project Costs (per August 2023 LRE)																	
Construction	$0	$ 58,000	$ 102,000	$ 592,000	$ 124,000	$ 408,000	$0	$ 3,330,000	$ 451,000	$ 719,000	$ 846,000	$ 80,000	$ 309,000	$ 319,000	$ 71,000	$ 494,000	$ 283,000
Design & Construction Engineering and Inspection (27% of Construction Cost)	$0	$ 16,000	$ 28,000	$ 160,000	$ 33,000	$ 110,000	$0	$ 899,000	$ 122,000	$ 194,000	$ 228,000	$ 22,000	$ 83,000	$ 86,000	$ 19,000	$ 133,000	$ 76,000
Right-of-Way Acquisition (Provided by FDOT)	$0	$ 948,000	$ 187,000	$0	$0	$ 472,000	$0	$ 1,520,000	$ 512,000	$ 289,000	$ 221,000	$0	$ 425,000	$ 398,000	$0	$ 483,000	$ 139,000
Wetland Mitigation	$0	$0	$0	$0	$0	$0	$0	$0	$0	$0	$0	$0	$ 200,000	$ 200,000	$ 200,000	$ 200,000	$0
Species Mitigation/Relocation	$0	$0	$0	$0	$0	$0	$0	$0	$0	$0	$0	$0	$0	$0	$0	$0	$0
Estimated Total Costs	$0	$ 1,022,000	$ 317,000	$ 752,000	$ 157,000	$ 990,000	$0	$ 5,749,000	$ 1,085,000	$ 1,202,000	$ 1,295,000	$ 102,000	$ 1,017,000	$ 1,003,000	$ 290,000	$ 1,310,000	$ 498,000

Note:
1. The light green highlight represents the Recommended Alternative based on Subtask 4.17.1 evaluation results and route continuity.
2. The dark green highlight represents the most favorable response to the criteria (e.g. L for low impact to endangered species, H for High potential to provide shade)
3. Criteria which had the same result for all alternatives (no impacts or the same impact) were not shown this evaluation matrix; e.g., Floodplain (no impact), archaeological sites (no impact), Wildlife/Threatened and Endangered Species (all low impact).
4. The costs shown do not reflect the total project cost (e.g. lighting, trail amenities, tunnel enhancements, landscaping).
5. The construction costs shown do not reflect project unknowns and are only calculated based on the features present in the typical sections.
6. For Public Support Ranking, a "-" means that this typical section was either developed after the public workshop or had no alternatives to rank.
7. B6 bridge to be built by Manatee County. No FDOT associated cost.
8. Utility costs are not included as a part of this PD&E's scope (section 4.9.1).

TABLE 3 Evaluation Criteria Sources

Evaluation Criteria	Source			Analysis Tool(s)
	PD&E Manual	Purpose and Need	Public Feedback	
Facility Purpose(s)				
Lateral Separation from Roadway		✓	✓	Aerial/Field Observations
Lateral Separation from Homes/Businesses		✓	✓	Aerial/Field Observations
Shade		✓	✓	Aerial/Field Observations
Trail Visibility/Security		✓	✓	Aerial/Field Observations
Service to Community Destinations		✓	✓	Aerial
School Connectivity/Student Mobility		✓	✓	Aerial
Connections to Transit Stops		✓	✓	Aerial/Transit Map
Trail System Continuity		✓	✓	Aerial/Existing Trail Plans
Public Support Ranking			✓	Public Outreach
Social Impacts				
Parcels Impacted	✓			Property Appraiser Map
Anticipated R/W Acquisition (acres)	✓			R/W Map
Number of Potential Section 4(f) Resources	✓			CSER/CRAS/4(f)
Potential Natural/Cultural Environmental Effects				
Archaeological Sites Potentially Affected	✓			CRAS
Historical Sites Potentially Affected	✓			CRAS
Wetlands (acres) Impacted	✓			NRE
Other Surface Waters (acres) Impacted	✓			NRE
Potential Physical Effects				
Utility Agency Owners impacted	✓			Utility/Greenline Maps
Utility Relocations	✓			Utility/Greenline Maps
Contamination Sites (M/H Levels Only)	✓			CSER
Safety				
Number of Driveway or Parking Lot (Business or Residential) Crossings (Only consider new const)	✓	✓		Aerial/Field Observations
At-grade Street and R/R Crossings	✓	✓		Aerial/Field Observations
Estimated Project Costs				
Construction	✓			LRE
Design & Construction Engineering and Inspection (27% of Construction Cost)	✓			LRE
Right-of-Way Acquisition (Under development)	✓			LRE
Wetland Mitigation	✓			Wetland Mitigation Bank Credit Cost

STATE OF FLORIDA

DEPARTMENT OF TRANSPORTATION

TYPICAL SECTION ANALYSIS

FINANCIAL PROJECT ID 444857-1-22-01

MANATEE COUNTY ( )

STATE ROAD NO.

APPROVED BY:

END PD&E STUDY
NORTHERN SECTION

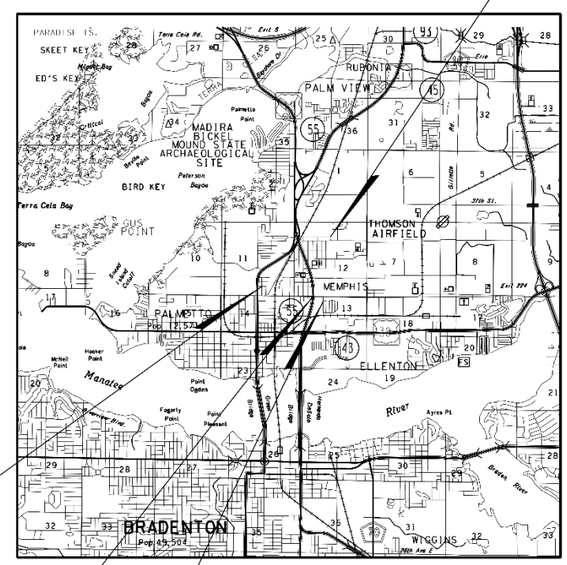

BEGIN PD&E STUDY
MIDDLE SECTION

END PD&E STUDY
MIDDLE SECTION

BEGIN PD&E STUDY
NORTHERN SECTION

THE ABOVE NAMED PROFESSIONAL ENGINEER SHALL BE RESPONSIBLE FOR THE FOLLOWING SHEETS IN ACCORDANCE WITH RULE 61G15-23.004, F.A.C.

TYPICAL SECTION PACKAGE

SHEET NO	SHEET DESCRIPTION	PD&E STUDY SEGMENT(S)
1	KEY SHEET	
2	TYPICAL SECTION 1A	A1
3	TYPICAL SECTION 1B	A1
4	TYPICAL SECTION 1C	A1
5	TYPICAL SECTION 1D	A1
6	TYPICAL SECTION 2	A2
7	TYPICAL SECTION 3	B1, B6
8	TYPICAL SECTION 4	B2
9	TYPICAL SECTION 5	B3
10	TYPICAL SECTION 6	B4
11	TYPICAL SECTION 7	B5
12	TYPICAL SECTION 8	C1, C2, C3, C8, F6, F7
13	TYPICAL SECTION 9	C4
14	TYPICAL SECTION 10A	C5
15	TYPICAL SECTION 10B	C5
16	TYPICAL SECTION 11	C7
17	TYPICAL SECTION 12	D1
18	TYPICAL SECTION 13	E4
19	TYPICAL SECTION 14	E5, E7
20	TYPICAL SECTION 15	E6
21	TYPICAL SECTION 16	F4
22	TYPICAL SECTION 17	F5
23	TYPICAL SECTION 18	G1
24	TYPICAL SECTION 19	G2

NOTE: THIS TYPICAL SECTION ANALYSIS INCLUDES SEGMENTS THAT ARE LOCATED IN STATE, COUNTY, AND CITY RIGHT OF WAYS.
AT A LATER DATE, INDIVIDUAL TYPICAL SECTION PACKAGES WILL BE CREATED FOR CONCURRENCE BY EACH AGENCY.
SEGMENT LOCATIONS CAN BE FOUND IN THE ATTACHED RECOMMENDED ALIGNMENT MEMO FOR THE PROJECT.

SHEET NO.
1

1/23/2023 6:17:46 PM

PROJECT CONTROLS

CONTEXT CLASSIFICATION

( ) C1 : NATURAL
( ) C2 : RURAL
( ) C2T : RURAL TOWN
(X) C3R : SUBURBAN RES.
( ) N/A : L.A. FACILITY
( ) C3C : SUBURBAN COMM.
( ) C4 : URBAN GENERAL
( ) C5 : URBAN CENTER
( ) C6 : URBAN CORE

FUNCTIONAL CLASSIFICATION

( ) INTERSTATE
( ) FREEWAY/EXPWY.
( ) PRINCIPAL ARTERIAL
( ) MINOR ARTERIAL
( ) MAJOR COLLECTOR
( ) MINOR COLLECTOR
(X) LOCAL

HIGHWAY SYSTEM

( ) NATIONAL HIGHWAY SYSTEM
( ) STRATEGIC INTERMODAL SYSTEM
( ) STATE HIGHWAY SYSTEM
(X) OFF-STATE HIGHWAY SYSTEM

ACCESS CLASSIFICATION

( ) 1 - FREEWAY
( ) 2 - RESTRICTIVE w/Service Roads
( ) 3 - RESTRICTIVE w/660 ft. Connection Spacing
( ) 4 - NON-RESTRICTIVE w/2640 ft. Signal Spacing
( ) 5 - RESTRICTIVE w/440 ft. Connection Spacing
( ) 6 - NON-RESTRICTIVE w/1320 ft. Signal Spacing
(X) 7 - BOTH MEDIAN TYPES

CRITERIA

(X) NEW CONSTRUCTION / RECONSTRUCTION
( ) RESURFACING (LA FACILITIES)
( ) RRR (ARTERIALS & COLLECTORS)

POTENTIAL EXCEPTIONS AND VARIATIONS RELATED TO TYPICAL SECTION:

TYPICAL SECTION No. 1A

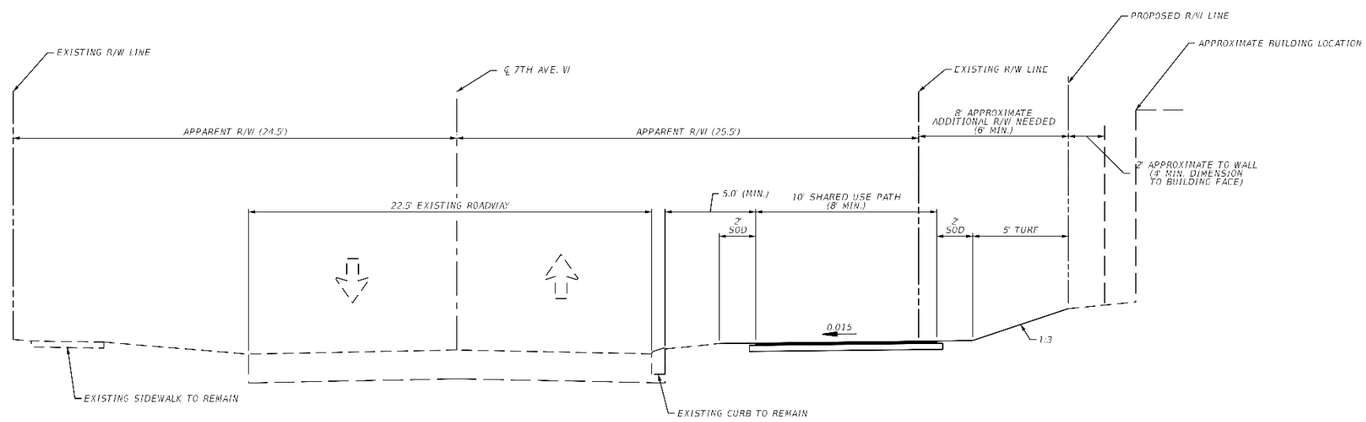

TYPICAL SECTION 1A

SEGMENT: A1

SHARED USE PATH DESIGN SPEED: 18 MPH

FINANCIAL PROJECT ID	SHEET NO.
444857-1-22-01	2

THE OFFICIAL RECORD OF THIS SHEET IS THE ELECTRONIC FILE DIGITALLY SIGNED AND SEALED UNDER RULE 61G15-23.004, F.A.C.

PROJECT CONTROLS

CONTEXT CLASSIFICATION

( ) C1 : NATURAL
( ) C2 : RURAL
( ) C2T : RURAL TOWN
(X) C3R : SUBURBAN RES.
( ) N/A : L.A. FACILITY
( ) C3C : SUBURBAN COMM.
( ) C4 : URBAN GENERAL
( ) C5 : URBAN CENTER
( ) C6 : URBAN CORE

FUNCTIONAL CLASSIFICATION

( ) INTERSTATE
( ) FREEWAY/EXPWY.
( ) PRINCIPAL ARTERIAL
( ) MINOR ARTERIAL
( ) MAJOR COLLECTOR
( ) MINOR COLLECTOR
(X) LOCAL

HIGHWAY SYSTEM

( ) NATIONAL HIGHWAY SYSTEM
( ) STRATEGIC INTERMODAL SYSTEM
( ) STATE HIGHWAY SYSTEM
(X) OFF-STATE HIGHWAY SYSTEM

ACCESS CLASSIFICATION

( ) 1 - FREEWAY
( ) 2 - RESTRICTIVE w/Service Roads
( ) 3 - RESTRICTIVE w/660 ft. Connection Spacing
( ) 4 - NON-RESTRICTIVE w/2640 ft. Signal Spacing
( ) 5 - RESTRICTIVE w/440 ft. Connection Spacing
( ) 6 - NON-RESTRICTIVE w/1320 ft. Signal Spacing
(X) 7 - BOTH MEDIAN TYPES

CRITERIA

(X) NEW CONSTRUCTION / RECONSTRUCTION
( ) RESURFACING (LA FACILITIES)
( ) RRR (ARTERIALS & COLLECTORS)

POTENTIAL EXCEPTIONS AND VARIATIONS RELATED TO TYPICAL SECTION:

TYPICAL SECTION No.1B

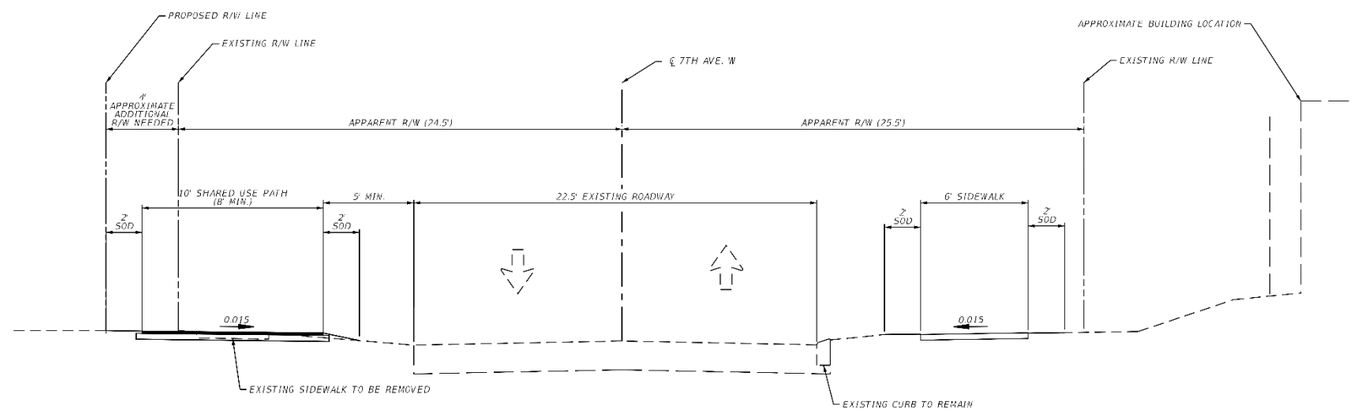

TYPICAL SECTION 1B

SEGMENT: A1

SHARED USE PATH DESIGN SPEED: 18 MPH

FINANCIAL PROJECT ID	SHEET NO.
444857-1-22-01	3

THE OFFICIAL RECORD OF THIS SHEET IS THE ELECTRONIC FILE DIGITALLY SIGNED AND SEALED UNDER RULE 61G15-23.004, F.A.C.

PROJECT CONTROLS

CONTEXT CLASSIFICATION

( ) C1 : NATURAL
( ) C2 : RURAL
( ) C2T : RURAL TOWN
(X) C3R : SUBURBAN RES.
( ) N/A : L.A. FACILITY
( ) C3C : SUBURBAN COMM.
( ) C4 : URBAN GENERAL
( ) C5 : URBAN CENTER
( ) C6 : URBAN CORE

FUNCTIONAL CLASSIFICATION

( ) INTERSTATE
( ) FREEWAY/EXPWY.
( ) PRINCIPAL ARTERIAL
( ) MINOR ARTERIAL
( ) MAJOR COLLECTOR
( ) MINOR COLLECTOR
(X) LOCAL

HIGHWAY SYSTEM

( ) NATIONAL HIGHWAY SYSTEM
( ) STRATEGIC INTERMODAL SYSTEM
( ) STATE HIGHWAY SYSTEM
(X) OFF-STATE HIGHWAY SYSTEM

ACCESS CLASSIFICATION

( ) 1 - FREEWAY
( ) 2 - RESTRICTIVE w/Service Roads
( ) 3 - RESTRICTIVE w/660 ft. Connection Spacing
( ) 4 - NON-RESTRICTIVE w/2640 ft. Signal Spacing
( ) 5 - RESTRICTIVE w/440 ft. Connection Spacing
( ) 6 - NON-RESTRICTIVE w/1320 ft. Signal Spacing
(X) 7 - BOTH MEDIAN TYPES

CRITERIA

(X) NEW CONSTRUCTION / RECONSTRUCTION
( ) RESURFACING (LA FACILITIES)
( ) RRR (ARTERIALS & COLLECTORS)

POTENTIAL EXCEPTIONS AND VARIATIONS RELATED TO TYPICAL SECTION:

TYPICAL SECTION No. 1C

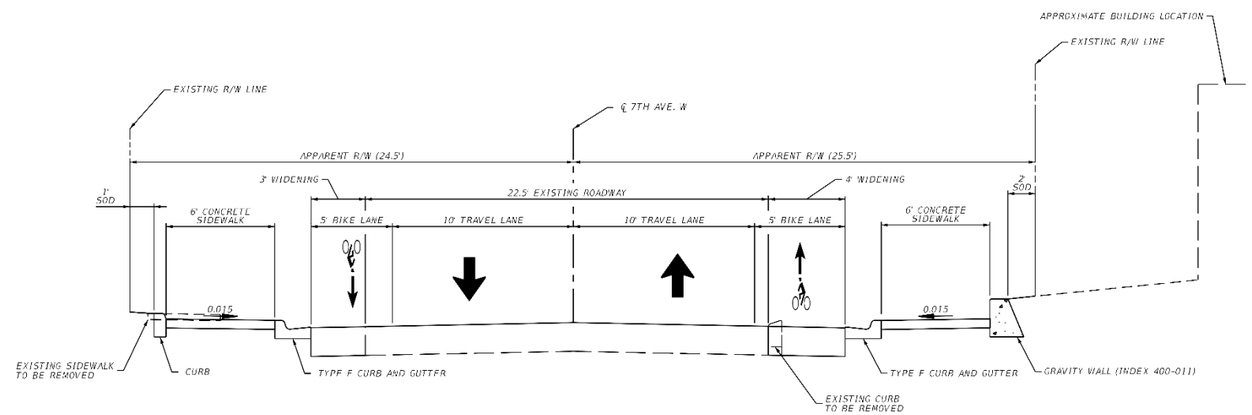

TYPICAL SECTION 1C

SEGMENT: A1

TRAFFIC DATA

POSTED SPEED: 30 MPH

FINANCIAL PROJECT ID	SHEET NO.
444857-1-22-01	4

THE OFFICIAL RECORD OF THIS SHEET IS THE ELECTRONIC FILE DIGITALLY SIGNED AND SEALED UNDER RULE 61G15-23.004, F.A.C.

PROJECT CONTROLS

CONTEXT CLASSIFICATION

( ) C1 : NATURAL
( ) C2 : RURAL
( ) C2T : RURAL TOWN
(X) C3R : SUBURBAN RES.
( ) N/A : L.A. FACILITY
( ) C3C : SUBURBAN COMM.
( ) C4 : URBAN GENERAL
( ) C5 : URBAN CENTER
( ) C6 : URBAN CORE

FUNCTIONAL CLASSIFICATION

( ) INTERSTATE
( ) FREEWAY/EXPWY.
( ) PRINCIPAL ARTERIAL
( ) MINOR ARTERIAL
( ) MAJOR COLLECTOR
( ) MINOR COLLECTOR
(X) LOCAL

HIGHWAY SYSTEM

( ) NATIONAL HIGHWAY SYSTEM
( ) STRATEGIC INTERMODAL SYSTEM
( ) STATE HIGHWAY SYSTEM
(X) OFF-STATE HIGHWAY SYSTEM

ACCESS CLASSIFICATION

( ) 1 - FREEWAY
( ) 2 - RESTRICTIVE w/Service Roads
( ) 3 - RESTRICTIVE w/660 ft. Connection Spacing
( ) 4 - NON-RESTRICTIVE w/2640 ft. Signal Spacing
( ) 5 - RESTRICTIVE w/440 ft. Connection Spacing
( ) 6 - NON-RESTRICTIVE w/1320 ft. Signal Spacing
(X) 7 - BOTH MEDIAN TYPES

CRITERIA

(X) NEW CONSTRUCTION / RECONSTRUCTION
( ) RESURFACING (LA FACILITIES)
( ) RRR (ARTERIALS & COLLECTORS)

POTENTIAL EXCEPTIONS AND VARIATIONS RELATED TO TYPICAL SECTION:

TYPICAL SECTION No.1D

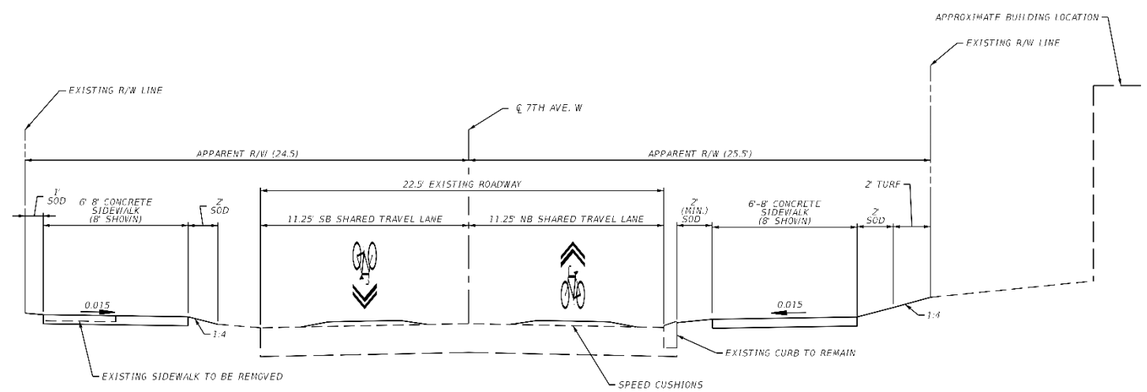

TYPICAL SECTION 1D

SEGMENT: A1

TRAFFIC DATA

POSTED SPEED: 30 MPH

FINANCIAL PROJECT ID	SHEET NO.
444857-1-22-01	5

THE OFFICIAL RECORD OF THIS SHEET IS THE ELECTRONIC FILE DIGITALLY SIGNED AND SEALED UNDER RULE 61G15-23.004, F.A.C.

PROJECT CONTROLS

CONTEXT CLASSIFICATION

( ) C1 : NATURAL
( ) C2 : RURAL
( ) C2T : RURAL TOWN
(X) C3R : SUBURBAN RES.
( ) N/A : L.A. FACILITY
( ) C3C : SUBURBAN COMM.
( ) C4 : URBAN GENERAL
( ) C5 : URBAN CENTER
( ) C6 : URBAN CORE

FUNCTIONAL CLASSIFICATION

( ) INTERSTATE
( ) FREEWAY/EXPWY.
( ) PRINCIPAL ARTERIAL
( ) MINOR ARTERIAL
(X) MAJOR COLLECTOR
( ) MINOR COLLECTOR
( ) LOCAL

HIGHWAY SYSTEM

( ) NATIONAL HIGHWAY SYSTEM
( ) STRATEGIC INTERMODAL SYSTEM
( ) STATE HIGHWAY SYSTEM
(X) OFF-STATE HIGHWAY SYSTEM

ACCESS CLASSIFICATION

( ) 1 - FREEWAY
( ) 2 - RESTRICTIVE w/Service Roads
( ) 3 - RESTRICTIVE w/660 ft. Connection Spacing
( ) 4 - NON-RESTRICTIVE w/2640 ft. Signal Spacing
( ) 5 - RESTRICTIVE w/440 ft. Connection Spacing
( ) 6 - NON-RESTRICTIVE w/1320 ft. Signal Spacing
(X) 7 - BOTH MEDIAN TYPES

CRITERIA

(X) NEW CONSTRUCTION / RECONSTRUCTION
( ) RESURFACING (LA FACILITIES)
( ) RRR (ARTERIALS & COLLECTORS)

POTENTIAL EXCEPTIONS AND VARIATIONS RELATED TO TYPICAL SECTION:

Narrow at RR Crossing to 6 feet
Narrow to avoid car park at western end of segment

TYPICAL SECTION No. 2

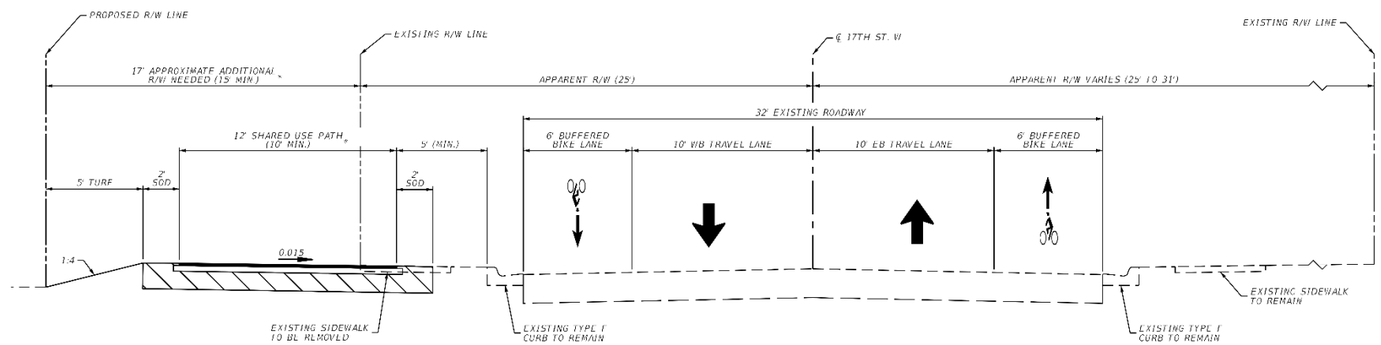

TYPICAL SECTION 2

SEGMENT: A2

*ADDITIONAL R/W REQUIRED FOR APPROXIMATELY 550' (~50% OF TOTAL SEGMENT)

TRAFFIC DATA

POSTED SPEED: 30 MPH

FINANCIAL PROJECT ID	SHEET NO.
444857-1-22-01	6

THE OFFICIAL RECORD OF THIS SHEET IS THE ELECTRONIC FILE DIGITALLY SIGNED AND SEALED UNDER RULE 61G15-23.004, F.A.C.

PROJECT CONTROLS

CONTEXT CLASSIFICATION

( ) C1 : NATURAL
( ) C2 : RURAL
( ) C2T : RURAL TOWN
(X) C3R : SUBURBAN RES.
( ) N/A : L.A. FACILITY
( ) C3C : SUBURBAN COMM.
( ) C4 : URBAN GENERAL
( ) C5 : URBAN CENTER
( ) C6 : URBAN CORE

FUNCTIONAL CLASSIFICATION

( ) INTERSTATE
( ) FREEWAY/EXPWY.
( ) PRINCIPAL ARTERIAL
( ) MINOR ARTERIAL
( ) MAJOR COLLECTOR
( ) MINOR COLLECTOR
(X) LOCAL

HIGHWAY SYSTEM

( ) NATIONAL HIGHWAY SYSTEM
( ) STRATEGIC INTERMODAL SYSTEM
( ) STATE HIGHWAY SYSTEM
(X) OFF-STATE HIGHWAY SYSTEM

ACCESS CLASSIFICATION

( ) 1 - FREEWAY
( ) 2 - RESTRICTIVE w/Service Roads
( ) 3 - RESTRICTIVE w/660 ft. Connection Spacing
( ) 4 - NON-RESTRICTIVE w/2640 ft. Signal Spacing
( ) 5 - RESTRICTIVE w/440 ft. Connection Spacing
( ) 6 - NON-RESTRICTIVE w/1320 ft. Signal Spacing
(X) 7 - BOTH MEDIAN TYPES

CRITERIA

(X) NEW CONSTRUCTION / RECONSTRUCTION
( ) RESURFACING (LA FACILITIES)
( ) RRR (ARTERIALS & COLLECTORS)

POTENTIAL EXCEPTIONS AND VARIATIONS RELATED TO TYPICAL SECTION:

TYPICAL SECTION No. 3

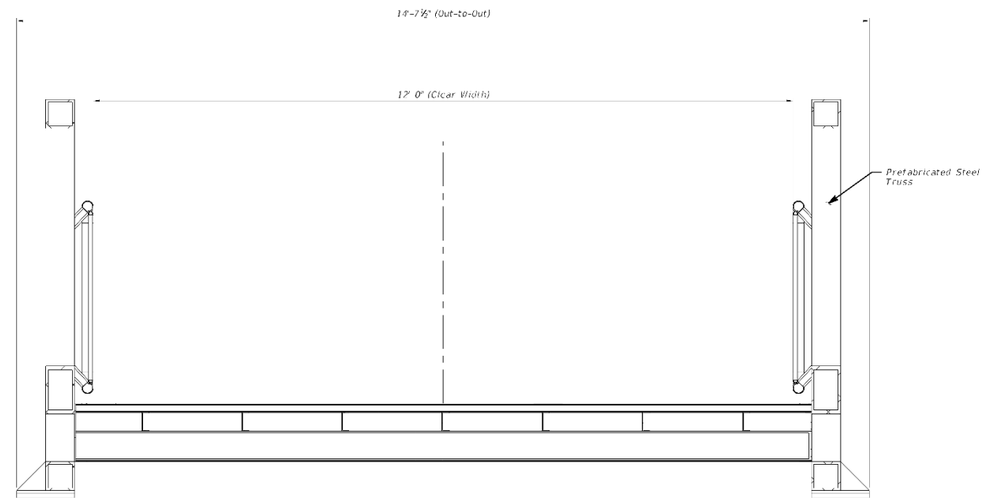

TYPICAL SECTION 3

SEGMENTS: B1, B6

SHARED USE PATH DESIGN SPEED: 18 MPH

NOTE: IF A BOX CULVERT IS USED INSTEAD OF A TRUSS BRIDGE, TYPICAL SECTION No. 4 WOULD APPLY

FINANCIAL PROJECT ID	SHEET NO.
444857-1-22-01	7

THE OFFICIAL RECORD OF THIS SHEET IS THE ELECTRONIC FILE DIGITALLY SIGNED AND SEALED UNDER RULE 61G15-23.004, F.A.C.

PROJECT CONTROLS

CONTEXT CLASSIFICATION

( ) C1 : NATURAL
( ) C2 : RURAL
( ) C2T : RURAL TOWN
(X) C3R : SUBURBAN RES.
( ) N/A : L.A. FACILITY
( ) C3C : SUBURBAN COMM.
( ) C4 : URBAN GENERAL
( ) C5 : URBAN CENTER
( ) C6 : URBAN CORE

FUNCTIONAL CLASSIFICATION

( ) INTERSTATE
( ) FREEWAY/EXPWY.
( ) PRINCIPAL ARTERIAL
( ) MINOR ARTERIAL
( ) MAJOR COLLECTOR
( ) MINOR COLLECTOR
(X) LOCAL

HIGHWAY SYSTEM

( ) NATIONAL HIGHWAY SYSTEM
( ) STRATEGIC INTERMODAL SYSTEM
( ) STATE HIGHWAY SYSTEM
(X) OFF-STATE HIGHWAY SYSTEM

ACCESS CLASSIFICATION

( ) 1 - FREEWAY
( ) 2 - RESTRICTIVE w/Service Roads
( ) 3 - RESTRICTIVE w/660 ft. Connection Spacing
( ) 4 - NON-RESTRICTIVE w/2640 ft. Signal Spacing
( ) 5 - RESTRICTIVE w/440 ft. Connection Spacing
( ) 6 - NON-RESTRICTIVE w/1320 ft. Signal Spacing
(X) 7 - BOTH MEDIAN TYPES

CRITERIA

(X) NEW CONSTRUCTION / RECONSTRUCTION
( ) RESURFACING (LA FACILITIES)
( ) RRR (ARTERIALS & COLLECTORS)

POTENTIAL EXCEPTIONS AND VARIATIONS RELATED TO TYPICAL SECTION:

NOTE: A JUNCTION BOX WILL BE NEEDED AT THE EASTERN END OF THIS SEGMENT TO FACILITATE A DRAINAGE CROSSING

TYPICAL SECTION No. 4

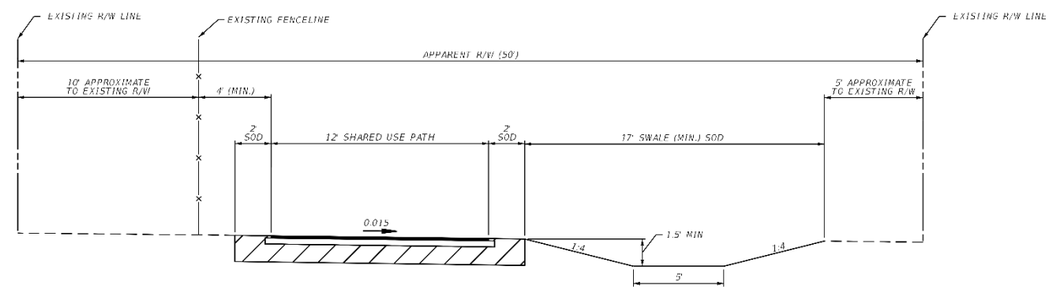

TYPICAL SECTION 4

SEGMENT: B2

SHARED USE PATH DESIGN SPEED: 18 MPH

NOTE: SEGMENTS B1 & B6 ALSO APPLY IF A BOX CULVERT IS USED INSTEAD OF A TRUSS BRIDGE.

FINANCIAL PROJECT ID	SHEET NO.
444857-1-22-01	8

THE OFFICIAL RECORD OF THIS SHEET IS THE ELECTRONIC FILE DIGITALLY SIGNED AND SEALED UNDER RULE 61G15-23.004, F.A.C.

PROJECT CONTROLS

CONTEXT CLASSIFICATION

( ) C1 : NATURAL
( ) C2 : RURAL
( ) C2T : RURAL TOWN
(X) C3R : SUBURBAN RES.
( ) N/A : L.A. FACILITY
( ) C3C : SUBURBAN COMM.
( ) C4 : URBAN GENERAL
( ) C5 : URBAN CENTER
( ) C6 : URBAN CORE

FUNCTIONAL CLASSIFICATION

( ) INTERSTATE
( ) FREEWAY/EXPWY.
(X) PRINCIPAL ARTERIAL
( ) MINOR ARTERIAL
( ) MAJOR COLLECTOR
( ) MINOR COLLECTOR
( ) LOCAL

HIGHWAY SYSTEM

(X) NATIONAL HIGHWAY SYSTEM
( ) STRATEGIC INTERMODAL SYSTEM
(X) STATE HIGHWAY SYSTEM
( ) OFF-STATE HIGHWAY SYSTEM

ACCESS CLASSIFICATION

( ) 1 - FREEWAY
( ) 2 - RESTRICTIVE w/Service Roads
(X) 3 - RESTRICTIVE w/660 ft. Connection Spacing
( ) 4 - NON-RESTRICTIVE w/2640 ft. Signal Spacing
( ) 5 - RESTRICTIVE w/440 ft. Connection Spacing
( ) 6 - NON-RESTRICTIVE w/1320 ft. Signal Spacing
( ) 7 - BOTH MEDIAN TYPES

CRITERIA

(X) NEW CONSTRUCTION / RECONSTRUCTION
( ) RESURFACING (LA FACILITIES)
( ) RRR (ARTERIALS & COLLECTORS)

POTENTIAL EXCEPTIONS AND VARIATIONS RELATED TO TYPICAL SECTION:

TYPICAL SECTION No. 5

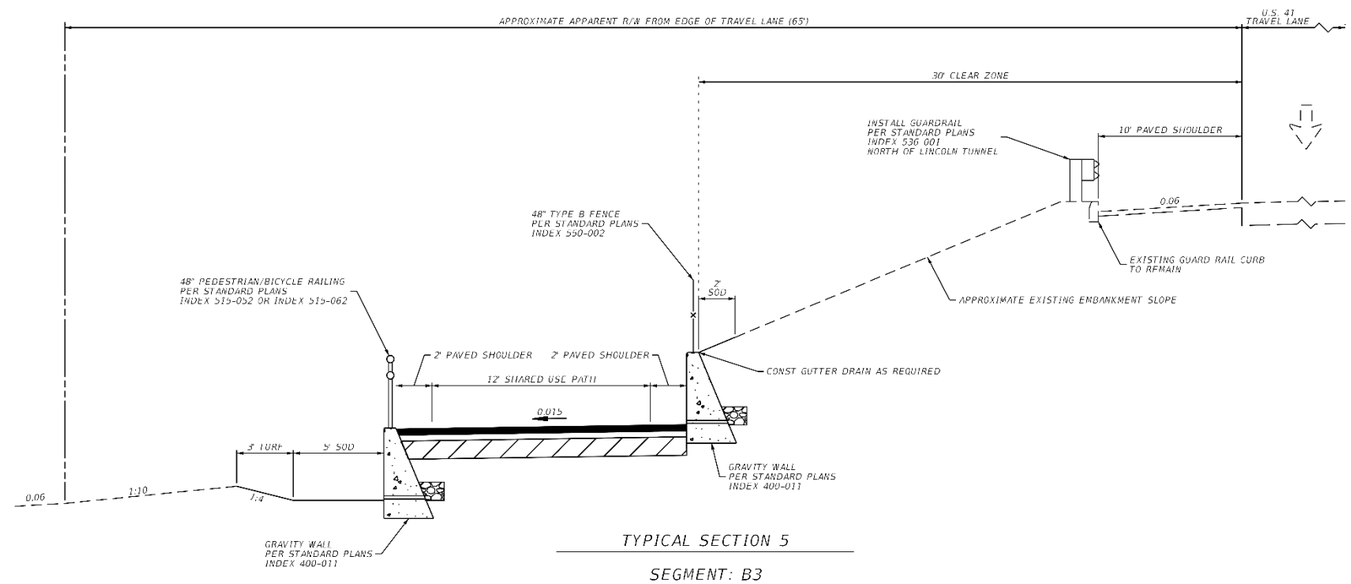

TYPICAL SECTION 5

SEGMENT: B3

SHARED USE PATH DESIGN SPEED: 18 MPH

THE OFFICIAL RECORD OF THIS SHEET IS THE ELECTRONIC FILE DIGITALLY SIGNED AND SEALED UNDER RULE 61G15-23.004, F.A.C.

FINANCIAL PROJECT ID	SHEET NO.
444857-1-22-01	9

PROJECT CONTROLS

CONTEXT CLASSIFICATION

( ) C1 : NATURAL
( ) C2 : RURAL
( ) C2T : RURAL TOWN
(X) C3R : SUBURBAN RES.
( ) N/A : L.A. FACILITY
( ) C3C : SUBURBAN COMM.
( ) C4 : URBAN GENERAL
( ) C5 : URBAN CENTER
( ) C6 : URBAN CORE

FUNCTIONAL CLASSIFICATION

( ) INTERSTATE
( ) FREEWAY/EXPWY.
(X) PRINCIPAL ARTERIAL
( ) MINOR ARTERIAL
( ) MAJOR COLLECTOR
( ) MINOR COLLECTOR
( ) LOCAL

HIGHWAY SYSTEM

(X) NATIONAL HIGHWAY SYSTEM
( ) STRATEGIC INTERMODAL SYSTEM
(X) STATE HIGHWAY SYSTEM
( ) OFF-STATE HIGHWAY SYSTEM

ACCESS CLASSIFICATION

( ) 1 - FREEWAY
( ) 2 - RESTRICTIVE w/Service Roads
(X) 3 - RESTRICTIVE w/660 ft. Connection Spacing
( ) 4 - NON-RESTRICTIVE w/2640 ft. Signal Spacing
( ) 5 - RESTRICTIVE w/440 ft. Connection Spacing
( ) 6 - NON-RESTRICTIVE w/1320 ft. Signal Spacing
( ) 7 - BOTH MEDIAN TYPES

CRITERIA

(X) NEW CONSTRUCTION / RECONSTRUCTION
( ) RESURFACING (LA FACILITIES)
( ) RRR (ARTERIALS & COLLECTORS)

POTENTIAL EXCEPTIONS AND VARIATIONS RELATED TO TYPICAL SECTION:

TYPICAL SECTION No. 6

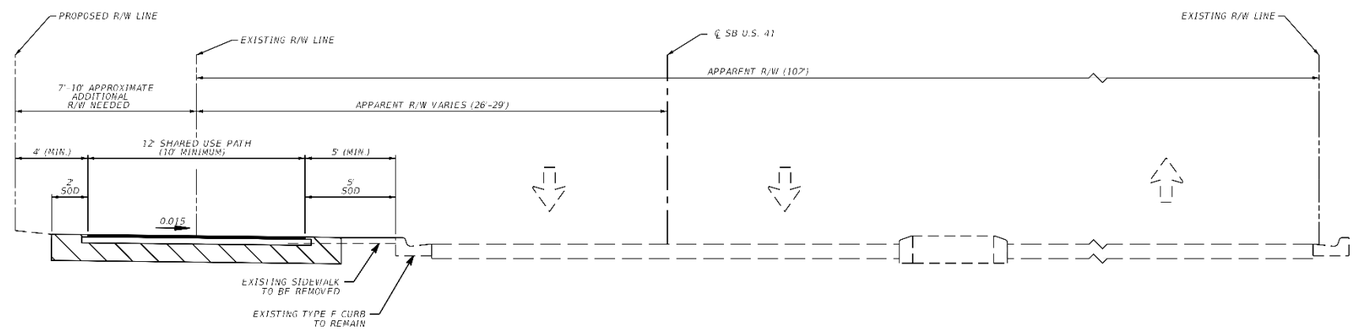

TYPICAL SECTION 6

SEGMENT: B4

SHARED USE PATH DESIGN SPEED: 18 MPH

FINANCIAL PROJECT ID	SHEET NO.
444857-1-22-01	10

THE OFFICIAL RECORD OF THIS SHEET IS THE ELECTRONIC FILE DIGITALLY SIGNED AND SEALED UNDER RULE 61G15-23.004, F.A.C.

PROJECT CONTROLS

CONTEXT CLASSIFICATION

( ) C1 : NATURAL
( ) C2 : RURAL
( ) C2T : RURAL TOWN
(X) C3R : SUBURBAN RES.
( ) N/A : L.A. FACILITY
( ) C3C : SUBURBAN COMM.
( ) C4 : URBAN GENERAL
( ) C5 : URBAN CENTER
( ) C6 : URBAN CORE

FUNCTIONAL CLASSIFICATION

( ) INTERSTATE
( ) FREEWAY/EXPWY.
( ) PRINCIPAL ARTERIAL
( ) MINOR ARTERIAL
( ) MAJOR COLLECTOR
( ) MINOR COLLECTOR
(X) LOCAL

HIGHWAY SYSTEM

( ) NATIONAL HIGHWAY SYSTEM
( ) STRATEGIC INTERMODAL SYSTEM
(X) STATE HIGHWAY SYSTEM
( ) OFF-STATE HIGHWAY SYSTEM

ACCESS CLASSIFICATION

( ) 1 - FREEWAY
( ) 2 - RESTRICTIVE w/Service Roads
( ) 3 - RESTRICTIVE w/660 ft. Connection Spacing
( ) 4 - NON-RESTRICTIVE w/2640 ft. Signal Spacing
( ) 5 - RESTRICTIVE w/440 ft. Connection Spacing
( ) 6 - NON-RESTRICTIVE w/1320 ft. Signal Spacing
(X) 7 - BOTH MEDIAN TYPES

CRITERIA

(X) NEW CONSTRUCTION / RECONSTRUCTION
( ) RESURFACING (LA FACILITIES)
( ) RRR (ARTERIALS & COLLECTORS)

POTENTIAL EXCEPTIONS AND VARIATIONS RELATED TO TYPICAL SECTION:

TYPICAL SECTION No. 7

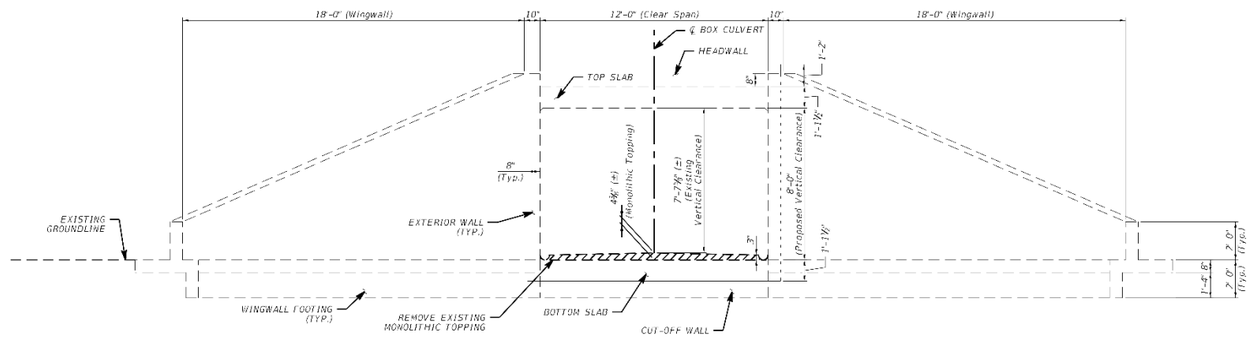

TYPICAL SECTION 7

SEGMENT: B5

SHARED USE PATH DESIGN SPEED: 18 MPH

FINANCIAL PROJECT ID	SHEET NO.
444857-1-22-01	11

THE OFFICIAL RECORD OF THIS SHEET IS THE ELECTRONIC FILE DIGITALLY SIGNED AND SEALED UNDER RULE 61G15-23.004, F.A.C.

PROJECT CONTROLS

CONTEXT CLASSIFICATION

( ) C1 : NATURAL
( ) C2 : RURAL
( ) C2T : RURAL TOWN
(X) C3R : SUBURBAN RES.
( ) N/A : L.A. FACILITY
( ) C3C : SUBURBAN COMM.
( ) C4 : URBAN GENERAL
( ) C5 : URBAN CENTER
( ) C6 : URBAN CORE

FUNCTIONAL CLASSIFICATION

( ) INTERSTATE
( ) FREEWAY/EXPWY.
( ) PRINCIPAL ARTERIAL
( ) MINOR ARTERIAL
( ) MAJOR COLLECTOR
( ) MINOR COLLECTOR
(X) LOCAL

HIGHWAY SYSTEM

( ) NATIONAL HIGHWAY SYSTEM
( ) STRATEGIC INTERMODAL SYSTEM
( ) STATE HIGHWAY SYSTEM
(X) OFF-STATE HIGHWAY SYSTEM

ACCESS CLASSIFICATION

( ) 1 - FREEWAY
( ) 2 - RESTRICTIVE w/Service Roads
( ) 3 - RESTRICTIVE w/660 ft. Connection Spacing
( ) 4 - NON-RESTRICTIVE w/2640 ft. Signal Spacing
( ) 5 - RESTRICTIVE w/440 ft. Connection Spacing
( ) 6 - NON-RESTRICTIVE w/1320 ft. Signal Spacing
(X) 7 - BOTH MEDIAN TYPES

CRITERIA

(X) NEW CONSTRUCTION / RECONSTRUCTION
( ) RESURFACING (LA FACILITIES)
( ) RRR (ARTERIALS & COLLECTORS)

POTENTIAL EXCEPTIONS AND VARIATIONS RELATED TO TYPICAL SECTION:

NOTE: C8 WILL REQUIRE A BRIDGE STRUCTURE OR BOX CULVERT TO CROSS THE EXISTING CANAL AND ROW ACQUISITION AT THE CONNECTION TO SEGMENT C6

TYPICAL SECTION No. 8

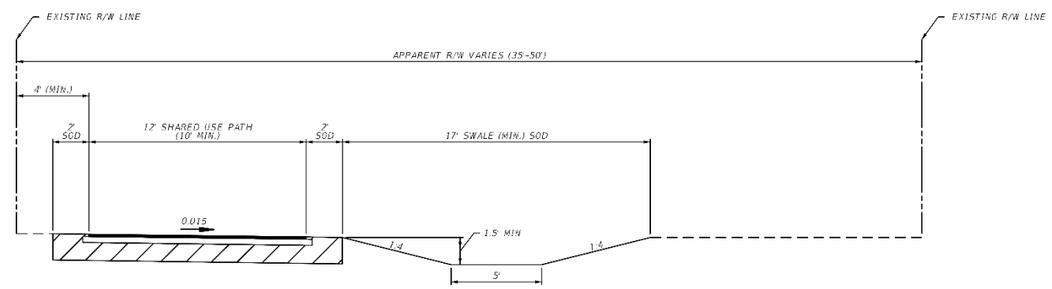

TYPICAL SECTION 8

SEGMENTS: C1, C2, C6, C8, F6, F7

SHARED USE PATH DESIGN SPEED: 18 MPH

FINANCIAL PROJECT ID	SHEET NO.
444857-1-22-01	12

THE OFFICIAL RECORD OF THIS SHEET IS THE ELECTRONIC FILE DIGITALLY SIGNED AND SEALED UNDER RULE 61G15-23.004, F.A.C.

PROJECT CONTROLS

CONTEXT CLASSIFICATION

( ) C1 : NATURAL
( ) C2 : RURAL
( ) C2T : RURAL TOWN
(X) C3R : SUBURBAN RES.
( ) N/A : L.A. FACILITY
( ) C3C : SUBURBAN COMM.
( ) C4 : URBAN GENERAL
( ) C5 : URBAN CENTER
( ) C6 : URBAN CORE

FUNCTIONAL CLASSIFICATION

( ) INTERSTATE
( ) FREEWAY/EXPWY.
( ) PRINCIPAL ARTERIAL
( ) MINOR ARTERIAL
( ) MAJOR COLLECTOR
( ) MINOR COLLECTOR
(X) LOCAL

HIGHWAY SYSTEM

( ) NATIONAL HIGHWAY SYSTEM
( ) STRATEGIC INTERMODAL SYSTEM
( ) STATE HIGHWAY SYSTEM
(X) OFF-STATE HIGHWAY SYSTEM

ACCESS CLASSIFICATION

( ) 1 - FREEWAY
( ) 2 - RESTRICTIVE w/Service Roads
( ) 3 - RESTRICTIVE w/660 ft. Connection Spacing
( ) 4 - NON-RESTRICTIVE w/2640 ft. Signal Spacing
( ) 5 - RESTRICTIVE w/440 ft. Connection Spacing
( ) 6 - NON-RESTRICTIVE w/1320 ft. Signal Spacing
(X) 7 - BOTH MEDIAN TYPES

CRITERIA

(X) NEW CONSTRUCTION / RECONSTRUCTION
( ) RESURFACING (LA FACILITIES)
( ) RRR (ARTERIALS & COLLECTORS)

POTENTIAL EXCEPTIONS AND VARIATIONS RELATED TO TYPICAL SECTION:

TYPICAL SECTION No. 9

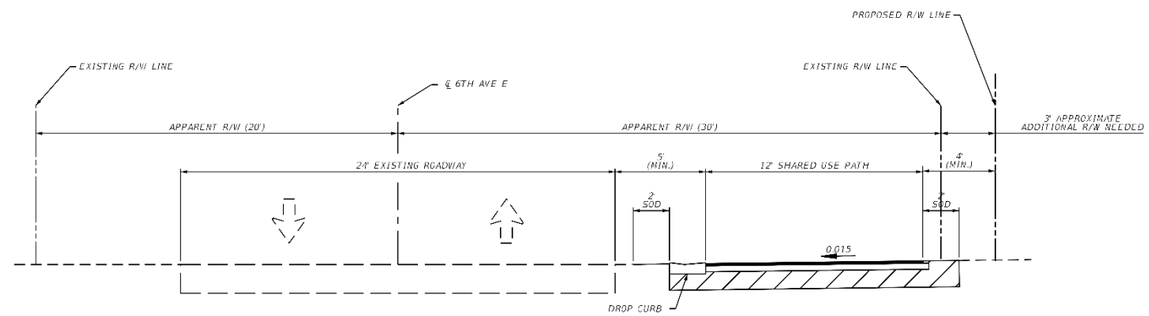

TYPICAL SECTION 9

SEGMENTS: C4

SHARED USE PATH DESIGN SPEED: 18 MPH

FINANCIAL PROJECT ID	SHEET NO.
444857-1-22-01	13

THE OFFICIAL RECORD OF THIS SHEET IS THE ELECTRONIC FILE DIGITALLY SIGNED AND SEALED UNDER RULE 61G15-23.004, F.A.C.

PROJECT CONTROLS

CONTEXT CLASSIFICATION

( ) C1 : NATURAL
( ) C2 : RURAL
( ) C2T : RURAL TOWN
(X) C3R : SUBURBAN RES.
( ) N/A : L.A. FACILITY
( ) C3C : SUBURBAN COMM.
( ) C4 : URBAN GENERAL
( ) C5 : URBAN CENTER
( ) C6 : URBAN CORE

FUNCTIONAL CLASSIFICATION

( ) INTERSTATE
( ) FREEWAY/EXPWY.
( ) PRINCIPAL ARTERIAL
( ) MINOR ARTERIAL
( ) MAJOR COLLECTOR
( ) MINOR COLLECTOR
(X) LOCAL

HIGHWAY SYSTEM

( ) NATIONAL HIGHWAY SYSTEM
( ) STRATEGIC INTERMODAL SYSTEM
( ) STATE HIGHWAY SYSTEM
(X) OFF-STATE HIGHWAY SYSTEM

ACCESS CLASSIFICATION

( ) 1 - FREEWAY
( ) 2 - RESTRICTIVE w/Service Roads
( ) 3 - RESTRICTIVE w/660 ft. Connection Spacing
( ) 4 - NON-RESTRICTIVE w/2640 ft. Signal Spacing
( ) 5 - RESTRICTIVE w/440 ft. Connection Spacing
( ) 6 - NON-RESTRICTIVE w/1320 ft. Signal Spacing
(X) 7 - BOTH MEDIAN TYPES

CRITERIA

(X) NEW CONSTRUCTION / RECONSTRUCTION
( ) RESURFACING (LA FACILITIES)
( ) RRR (ARTERIALS & COLLECTORS)

POTENTIAL EXCEPTIONS AND VARIATIONS RELATED TO TYPICAL SECTION:

TYPICAL SECTION No.10A

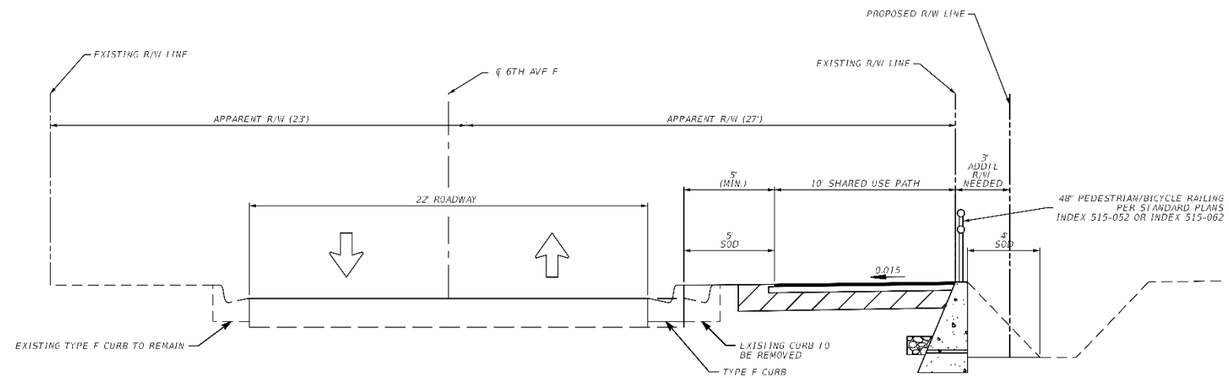

TYPICAL SECTION 10A

SEGMENTS: C5

SHARED USE PATH DESIGN SPEED: 18 MPH

FINANCIAL PROJECT ID	SHEET NO.
444857-1-22-01	14

THE OFFICIAL RECORD OF THIS SHEET IS THE ELECTRONIC FILE DIGITALLY SIGNED AND SEALED UNDER RULE 61G15-23.004, F.A.C.

PROJECT CONTROLS

CONTEXT CLASSIFICATION

( ) C1 : NATURAL
( ) C2 : RURAL
( ) C2T : RURAL TOWN
(X) C3R : SUBURBAN RES.
( ) N/A : L.A. FACILITY
( ) C3C : SUBURBAN COMM.
( ) C4 : URBAN GENERAL
( ) C5 : URBAN CENTER
( ) C6 : URBAN CORE

FUNCTIONAL CLASSIFICATION

( ) INTERSTATE
( ) FREEWAY/EXPWY.
( ) PRINCIPAL ARTERIAL
( ) MINOR ARTERIAL
( ) MAJOR COLLECTOR
( ) MINOR COLLECTOR
(X) LOCAL

HIGHWAY SYSTEM

( ) NATIONAL HIGHWAY SYSTEM
( ) STRATEGIC INTERMODAL SYSTEM
( ) STATE HIGHWAY SYSTEM
(X) OFF-STATE HIGHWAY SYSTEM

ACCESS CLASSIFICATION

( ) 1 - FREEWAY
( ) 2 - RESTRICTIVE w/Service Roads
( ) 3 - RESTRICTIVE w/660 ft. Connection Spacing
( ) 4 - NON-RESTRICTIVE w/2640 ft. Signal Spacing
( ) 5 - RESTRICTIVE w/440 ft. Connection Spacing
( ) 6 - NON-RESTRICTIVE w/1320 ft. Signal Spacing
(X) 7 - BOTH MEDIAN TYPES

CRITERIA

(X) NEW CONSTRUCTION / RECONSTRUCTION
( ) RESURFACING (LA FACILITIES)
( ) RRR (ARTERIALS & COLLECTORS)

POTENTIAL EXCEPTIONS AND VARIATIONS RELATED TO TYPICAL SECTION:

8-foot border width allowable per FDM Table 210.7.1 Note 2

Note: Potential impact to treatment swale east of proposed R/W line

TYPICAL SECTION No.10B

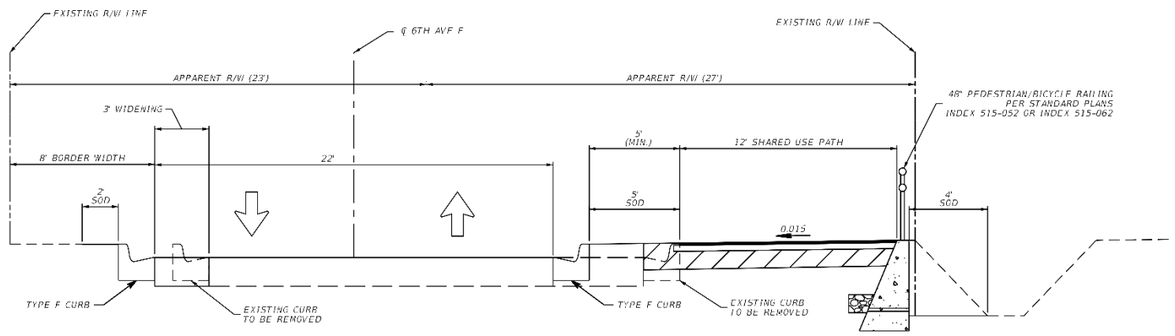

TYPICAL SECTION 10B

SEGMENTS: C5

SHARED USE PATH DESIGN SPEED: 18 MPH

FINANCIAL PROJECT ID	SHEET NO.
444857-1-22-01	15

THE OFFICIAL RECORD OF THIS SHEET IS THE ELECTRONIC FILE DIGITALLY SIGNED AND SEALED UNDER RULE 61G15-23.004, F.A.C.

PROJECT CONTROLS

CONTEXT CLASSIFICATION

( ) C1 : NATURAL
( ) C2 : RURAL
( ) C2T : RURAL TOWN
(X) C3R : SUBURBAN RES.
( ) N/A : L.A. FACILITY
( ) C3C : SUBURBAN COMM.
( ) C4 : URBAN GENERAL
( ) C5 : URBAN CENTER
( ) C6 : URBAN CORE

FUNCTIONAL CLASSIFICATION

( ) INTERSTATE
( ) FREEWAY/EXPWY.
( ) PRINCIPAL ARTERIAL
( ) MINOR ARTERIAL
( ) MAJOR COLLECTOR
( ) MINOR COLLECTOR
(X) LOCAL

HIGHWAY SYSTEM

( ) NATIONAL HIGHWAY SYSTEM
( ) STRATEGIC INTERMODAL SYSTEM
( ) STATE HIGHWAY SYSTEM
(X) OFF-STATE HIGHWAY SYSTEM

ACCESS CLASSIFICATION

( ) 1 - FREEWAY
( ) 2 - RESTRICTIVE w/Service Roads
( ) 3 - RESTRICTIVE w/660 ft. Connection Spacing
( ) 4 - NON-RESTRICTIVE w/2640 ft. Signal Spacing
( ) 5 - RESTRICTIVE w/440 ft. Connection Spacing
( ) 6 - NON-RESTRICTIVE w/1320 ft. Signal Spacing
(X) 7 - BOTH MEDIAN TYPES

CRITERIA

(X) NEW CONSTRUCTION / RECONSTRUCTION
( ) RESURFACING (LA FACILITIES)
( ) RRR (ARTERIALS & COLLECTORS)

POTENTIAL EXCEPTIONS AND VARIATIONS RELATED TO TYPICAL SECTION:

TYPICAL SECTION No. 11

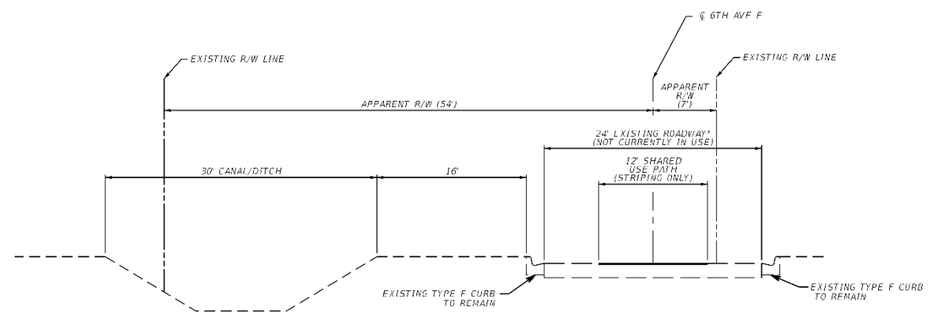

TYPICAL SECTION 11

SEGMENTS: C7

*PAVED ROADWAY NOT PRESENT FOR 215' NORTH OF 18TH ST CT E

SHARED USE PATH DESIGN SPEED: 18 MPH

FINANCIAL PROJECT ID	SHEET NO.
444857-1-22-01	16

THE OFFICIAL RECORD OF THIS SHEET IS THE ELECTRONIC FILE DIGITALLY SIGNED AND SEALED UNDER RULE 61G15-23.004, F.A.C.

PROJECT CONTROLS

CONTEXT CLASSIFICATION

( ) C1 : NATURAL
( ) C2 : RURAL
( ) C2T : RURAL TOWN
(X) C3R : SUBURBAN RES.
( ) N/A : L.A. FACILITY
( ) C3C : SUBURBAN COMM.
( ) C4 : URBAN GENERAL
( ) C5 : URBAN CENTER
( ) C6 : URBAN CORE

FUNCTIONAL CLASSIFICATION

( ) INTERSTATE
( ) FREEWAY/EXPWY.
( ) PRINCIPAL ARTERIAL
( ) MINOR ARTERIAL
( ) MAJOR COLLECTOR
( ) MINOR COLLECTOR
(X) LOCAL

HIGHWAY SYSTEM

( ) NATIONAL HIGHWAY SYSTEM
( ) STRATEGIC INTERMODAL SYSTEM
( ) STATE HIGHWAY SYSTEM
(X) OFF-STATE HIGHWAY SYSTEM

ACCESS CLASSIFICATION

( ) 1 - FREEWAY
( ) 2 - RESTRICTIVE w/Service Roads
( ) 3 - RESTRICTIVE w/660 ft. Connection Spacing
( ) 4 - NON-RESTRICTIVE w/2640 ft. Signal Spacing
( ) 5 - RESTRICTIVE w/440 ft. Connection Spacing
( ) 6 - NON-RESTRICTIVE w/1320 ft. Signal Spacing
(X) 7 - BOTH MEDIAN TYPES

CRITERIA

(X) NEW CONSTRUCTION / RECONSTRUCTION
( ) RESURFACING (LA FACILITIES)
( ) RRR (ARTERIALS & COLLECTORS)

POTENTIAL EXCEPTIONS AND VARIATIONS RELATED TO TYPICAL SECTION:

TYPICAL SECTION No. 12

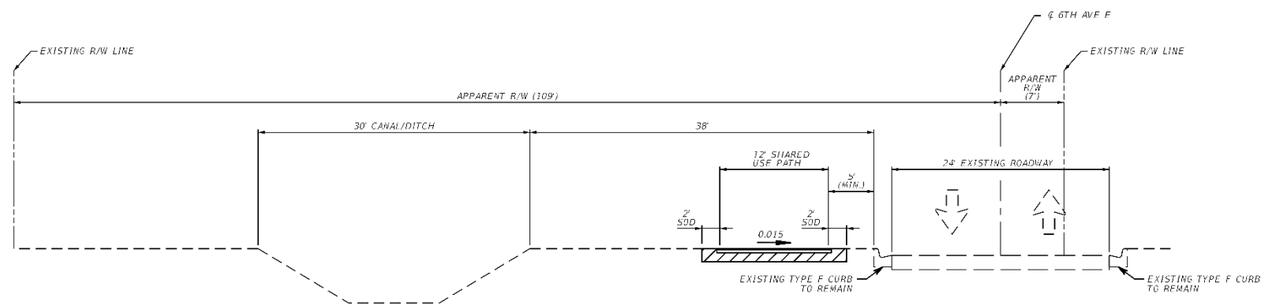

TYPICAL SECTION 12

SEGMENTS: D1

SHARED USE PATH DESIGN SPEED: 18 MPH

FINANCIAL PROJECT ID	SHEET NO.
444857-1-22-01	17

THE OFFICIAL RECORD OF THIS SHEET IS THE ELECTRONIC FILE DIGITALLY SIGNED AND SEALED UNDER RULE 61G15-23.004, F.A.C.

PROJECT CONTROLS

CONTEXT CLASSIFICATION

( ) C1 : NATURAL
( ) C2 : RURAL
( ) C2T : RURAL TOWN
(X) C3R : SUBURBAN RES.
( ) N/A : L.A. FACILITY
( ) C3C : SUBURBAN COMM.
( ) C4 : URBAN GENERAL
( ) C5 : URBAN CENTER
( ) C6 : URBAN CORE

FUNCTIONAL CLASSIFICATION

( ) INTERSTATE
( ) FREEWAY/EXPWY.
( ) PRINCIPAL ARTERIAL
( ) MINOR ARTERIAL
( ) MAJOR COLLECTOR
( ) MINOR COLLECTOR
(X) LOCAL

HIGHWAY SYSTEM

( ) NATIONAL HIGHWAY SYSTEM
( ) STRATEGIC INTERMODAL SYSTEM
( ) STATE HIGHWAY SYSTEM
(X) OFF-STATE HIGHWAY SYSTEM

ACCESS CLASSIFICATION

( ) 1 - FREEWAY
( ) 2 - RESTRICTIVE w/Service Roads
( ) 3 - RESTRICTIVE w/660 ft. Connection Spacing
( ) 4 - NON-RESTRICTIVE w/2640 ft. Signal Spacing
( ) 5 - RESTRICTIVE w/440 ft. Connection Spacing
( ) 6 - NON-RESTRICTIVE w/1320 ft. Signal Spacing
(X) 7 - BOTH MEDIAN TYPES

CRITERIA

(X) NEW CONSTRUCTION / RECONSTRUCTION
( ) RESURFACING (LA FACILITIES)
( ) RRR (ARTERIALS & COLLECTORS)

POTENTIAL EXCEPTIONS AND VARIATIONS RELATED TO TYPICAL SECTION:

TYPICAL SECTION No. 13

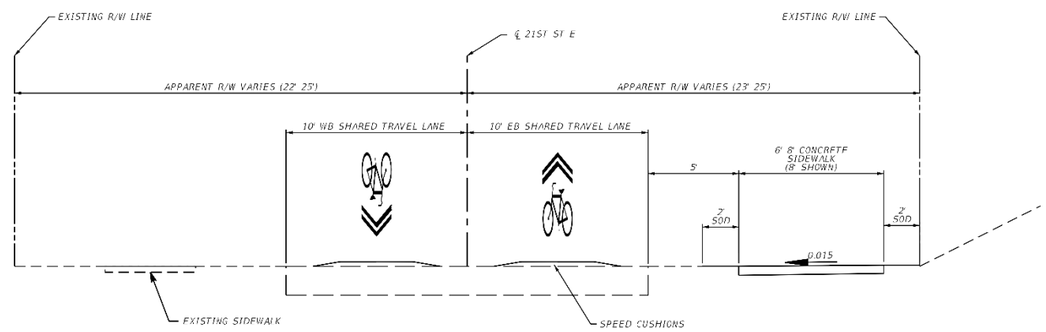

TYPICAL SECTION 13

SEGMENTS: E4

TRAFFIC DATA

POSTED SPEED: 30 MPH

THE OFFICIAL RECORD OF THIS SHEET IS THE ELECTRONIC FILE DIGITALLY SIGNED AND SEALED UNDER RULE 61G15-23.004, F.A.C.

FINANCIAL PROJECT ID	SHEET NO.
444857-1-22-01	18

1/23/2023 6:17:50 PM

PROJECT CONTROLS

CONTEXT CLASSIFICATION

( ) C1 : NATURAL
( ) C2 : RURAL
( ) C2T : RURAL TOWN
(X) C3R : SUBURBAN RES.
( ) N/A : L.A. FACILITY
( ) C3C : SUBURBAN COMM.
( ) C4 : URBAN GENERAL
( ) C5 : URBAN CENTER
( ) C6 : URBAN CORE

FUNCTIONAL CLASSIFICATION

( ) INTERSTATE
( ) FREEWAY/EXPWY.
( ) PRINCIPAL ARTERIAL
( ) MINOR ARTERIAL
( ) MAJOR COLLECTOR
( ) MINOR COLLECTOR
(X) LOCAL

HIGHWAY SYSTEM

( ) NATIONAL HIGHWAY SYSTEM
( ) STRATEGIC INTERMODAL SYSTEM
( ) STATE HIGHWAY SYSTEM
(X) OFF-STATE HIGHWAY SYSTEM

ACCESS CLASSIFICATION

( ) 1 - FREEWAY
( ) 2 - RESTRICTIVE w/Service Roads
( ) 3 - RESTRICTIVE w/660 ft. Connection Spacing
( ) 4 - NON-RESTRICTIVE w/2640 ft. Signal Spacing
( ) 5 - RESTRICTIVE w/440 ft. Connection Spacing
( ) 6 - NON-RESTRICTIVE w/1320 ft. Signal Spacing
(X) 7 - BOTH MEDIAN TYPES

CRITERIA

(X) NEW CONSTRUCTION / RECONSTRUCTION
( ) RESURFACING (LA FACILITIES)
( ) RRR (ARTERIALS & COLLECTORS)

POTENTIAL EXCEPTIONS AND VARIATIONS RELATED TO TYPICAL SECTION:

TYPICAL SECTION No. 14

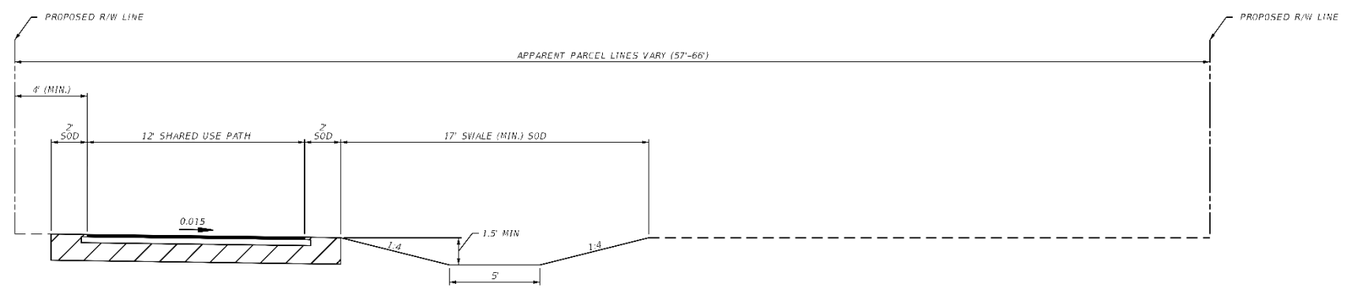

TYPICAL SECTION 14

SEGMENTS: E5, E7

SHARED USE PATH DESIGN SPEED: 18 MPH

THE OFFICIAL RECORD OF THIS SHEET IS THE ELECTRONIC FILE DIGITALLY SIGNED AND SEALED UNDER RULE 61G15-23.004, F.A.C.

FINANCIAL PROJECT ID	SHEET NO.
444857-1-22-01	19

1/23/2023 6:17:53 PM

PROJECT CONTROLS

CONTEXT CLASSIFICATION

( ) C1 : NATURAL
( ) C2 : RURAL
( ) C2T : RURAL TOWN
(X) C3R : SUBURBAN RES.
( ) N/A : L.A. FACILITY
( ) C3C : SUBURBAN COMM.
( ) C4 : URBAN GENERAL
( ) C5 : URBAN CENTER
( ) C6 : URBAN CORE

FUNCTIONAL CLASSIFICATION

( ) INTERSTATE
( ) FREEWAY/EXPWY.
( ) PRINCIPAL ARTERIAL
( ) MINOR ARTERIAL
( ) MAJOR COLLECTOR
( ) MINOR COLLECTOR
(X) LOCAL

HIGHWAY SYSTEM

( ) NATIONAL HIGHWAY SYSTEM
( ) STRATEGIC INTERMODAL SYSTEM
( ) STATE HIGHWAY SYSTEM
(X) OFF-STATE HIGHWAY SYSTEM

ACCESS CLASSIFICATION

( ) 1 - FREEWAY
( ) 2 - RESTRICTIVE w/Service Roads
( ) 3 - RESTRICTIVE w/660 ft. Connection Spacing
( ) 4 - NON-RESTRICTIVE w/2640 ft. Signal Spacing
( ) 5 - RESTRICTIVE w/440 ft. Connection Spacing
( ) 6 - NON-RESTRICTIVE w/1320 ft. Signal Spacing
(X) 7 - BOTH MEDIAN TYPES

CRITERIA

(X) NEW CONSTRUCTION / RECONSTRUCTION
( ) RESURFACING (LA FACILITIES)
( ) RRR (ARTERIALS & COLLECTORS)

POTENTIAL EXCEPTIONS AND VARIATIONS RELATED TO TYPICAL SECTION:

TYPICAL SECTION No. 15

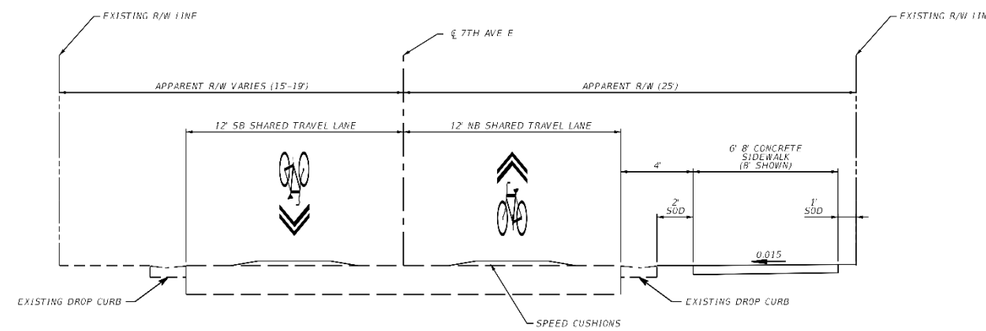

TYPICAL SECTION 15

SEGMENTS: E6

TRAFFIC DATA

POSTED SPEED: 30 MPH

FINANCIAL PROJECT ID	SHEET NO.
444857-1-22-01	20

THE OFFICIAL RECORD OF THIS SHEET IS THE ELECTRONIC FILE DIGITALLY SIGNED AND SEALED UNDER RULE 61G15-23.004, F.A.C.

PROJECT CONTROLS

CONTEXT CLASSIFICATION

( ) C1 : NATURAL
( ) C2 : RURAL
( ) C2T : RURAL TOWN
(X) C3R : SUBURBAN RES.
( ) N/A : L.A. FACILITY
( ) C3C : SUBURBAN COMM.
( ) C4 : URBAN GENERAL
( ) C5 : URBAN CENTER
( ) C6 : URBAN CORE

FUNCTIONAL CLASSIFICATION

( ) INTERSTATE
( ) FREEWAY/EXPWY.
( ) PRINCIPAL ARTERIAL
( ) MINOR ARTERIAL
( ) MAJOR COLLECTOR
( ) MINOR COLLECTOR
(X) LOCAL

HIGHWAY SYSTEM

( ) NATIONAL HIGHWAY SYSTEM
( ) STRATEGIC INTERMODAL SYSTEM
( ) STATE HIGHWAY SYSTEM
(X) OFF-STATE HIGHWAY SYSTEM

ACCESS CLASSIFICATION

( ) 1 - FREEWAY
( ) 2 - RESTRICTIVE w/Service Roads
( ) 3 - RESTRICTIVE w/660 ft. Connection Spacing
( ) 4 - NON-RESTRICTIVE w/2640 ft. Signal Spacing
( ) 5 - RESTRICTIVE w/440 ft. Connection Spacing
( ) 6 - NON-RESTRICTIVE w/1320 ft. Signal Spacing
(X) 7 - BOTH MEDIAN TYPES

CRITERIA

(X) NEW CONSTRUCTION / RECONSTRUCTION
( ) RESURFACING (LA FACILITIES)
( ) RRR (ARTERIALS & COLLECTORS)

POTENTIAL EXCEPTIONS AND VARIATIONS RELATED TO TYPICAL SECTION:

Note: Impact to existing shed on westernmost parcel of segment

TYPICAL SECTION No. 16

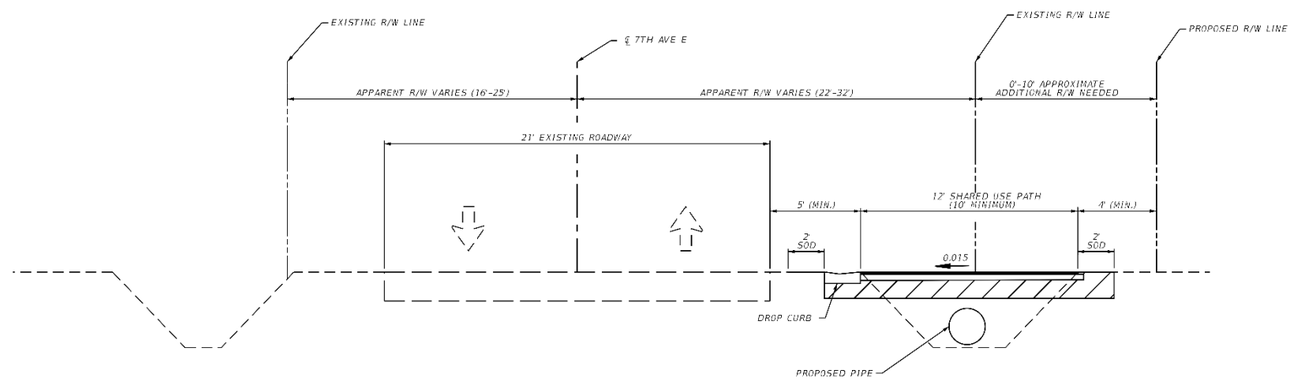

TYPICAL SECTION 16

SEGMENTS: F4

SHARED USE PATH DESIGN SPEED: 18 MPH

FINANCIAL PROJECT ID	SHEET NO.
444857-1-22-01	21

THE OFFICIAL RECORD OF THIS SHEET IS THE ELECTRONIC FILE DIGITALLY SIGNED AND SEALED UNDER RULE 61G15-23.004, F.A.C.

PROJECT CONTROLS

CONTEXT CLASSIFICATION

( ) C1 : NATURAL
( ) C2 : RURAL
( ) C2T : RURAL TOWN
(X) C3R : SUBURBAN RES.
( ) N/A : L.A. FACILITY
( ) C3C : SUBURBAN COMM.
( ) C4 : URBAN GENERAL
( ) C5 : URBAN CENTER
( ) C6 : URBAN CORE

FUNCTIONAL CLASSIFICATION

( ) INTERSTATE
( ) FREEWAY/EXPWY.
( ) PRINCIPAL ARTERIAL
( ) MINOR ARTERIAL
( ) MAJOR COLLECTOR
( ) MINOR COLLECTOR
(X) LOCAL

HIGHWAY SYSTEM

( ) NATIONAL HIGHWAY SYSTEM
( ) STRATEGIC INTERMODAL SYSTEM
( ) STATE HIGHWAY SYSTEM
(X) OFF-STATE HIGHWAY SYSTEM

ACCESS CLASSIFICATION

( ) 1 - FREEWAY
( ) 2 - RESTRICTIVE w/Service Roads
( ) 3 - RESTRICTIVE w/660 ft. Connection Spacing
( ) 4 - NON-RESTRICTIVE w/2640 ft. Signal Spacing
( ) 5 - RESTRICTIVE w/440 ft. Connection Spacing
( ) 6 - NON-RESTRICTIVE w/1320 ft. Signal Spacing
(X) 7 - BOTH MEDIAN TYPES

CRITERIA

(X) NEW CONSTRUCTION / RECONSTRUCTION
( ) RESURFACING (LA FACILITIES)
( ) RRR (ARTERIALS & COLLECTORS)

POTENTIAL EXCEPTIONS AND VARIATIONS RELATED TO TYPICAL SECTION:

TYPICAL SECTION No. 17

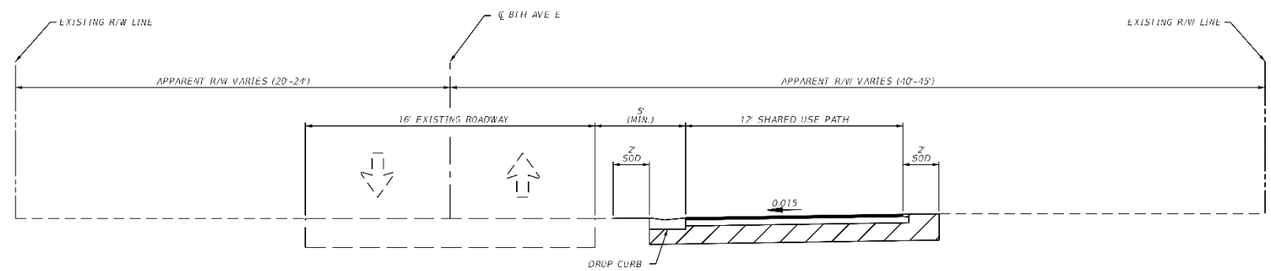

TYPICAL SECTION 17

SEGMENTS: F5

SHARED USE PATH DESIGN SPEED: 18 MPH

FINANCIAL PROJECT ID	SHEET NO.
444857-1-22-01	22

THE OFFICIAL RECORD OF THIS SHEET IS THE ELECTRONIC FILE DIGITALLY SIGNED AND SEALED UNDER RULE 61G15-23.004, F.A.C.

PROJECT CONTROLS

CONTEXT CLASSIFICATION

( ) C1 : NATURAL
( ) C2 : RURAL
( ) C2T : RURAL TOWN
(X) C3R : SUBURBAN RES.
( ) N/A : L.A. FACILITY
( ) C3C : SUBURBAN COMM.
( ) C4 : URBAN GENERAL
( ) C5 : URBAN CENTER
( ) C6 : URBAN CORE

FUNCTIONAL CLASSIFICATION

( ) INTERSTATE
( ) FREEWAY/EXPWY.
( ) PRINCIPAL ARTERIAL
( ) MINOR ARTERIAL
( ) MAJOR COLLECTOR
( ) MINOR COLLECTOR
(X) LOCAL

HIGHWAY SYSTEM

( ) NATIONAL HIGHWAY SYSTEM
( ) STRATEGIC INTERMODAL SYSTEM
( ) STATE HIGHWAY SYSTEM
(X) OFF-STATE HIGHWAY SYSTEM

ACCESS CLASSIFICATION

( ) 1 - FREEWAY
( ) 2 - RESTRICTIVE w/Service Roads
( ) 3 - RESTRICTIVE w/660 ft. Connection Spacing
( ) 4 - NON-RESTRICTIVE w/2640 ft. Signal Spacing
( ) 5 - RESTRICTIVE w/440 ft. Connection Spacing
( ) 6 - NON-RESTRICTIVE w/1320 ft. Signal Spacing
(X) 7 - BOTH MEDIAN TYPES

CRITERIA

(X) NEW CONSTRUCTION / RECONSTRUCTION
( ) RESURFACING (LA FACILITIES)
( ) RRR (ARTERIALS & COLLECTORS)

POTENTIAL EXCEPTIONS AND VARIATIONS RELATED TO TYPICAL SECTION:

TYPICAL SECTION No. 18

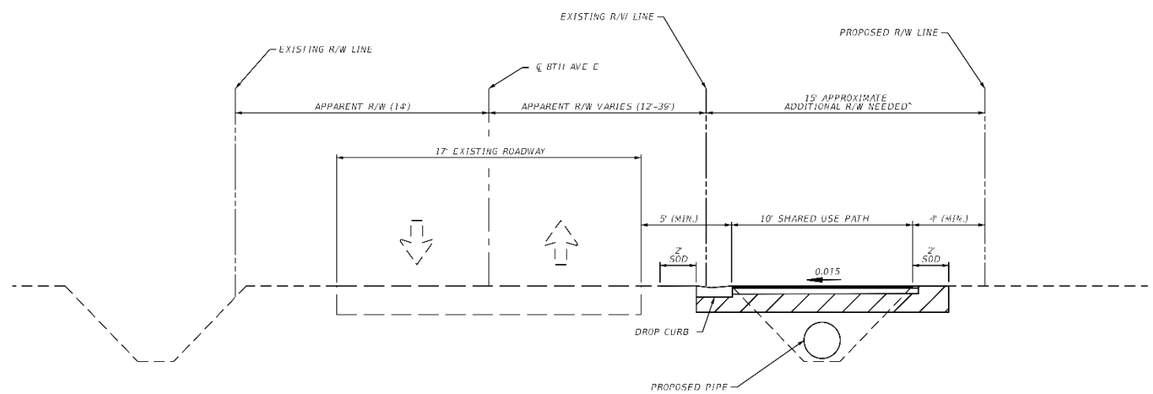

TYPICAL SECTION 18

SEGMENTS: G1

*ADDITIONAL R/W REQUIRED FOR APPROXIMATELY 85' (~35% OF TOTAL SEGMENT)

SHARED USE PATH DESIGN SPEED: 18 MPH

FINANCIAL PROJECT ID	SHEET NO.
444857-1-22-01	23

THE OFFICIAL RECORD OF THIS SHEET IS THE ELECTRONIC FILE DIGITALLY SIGNED AND SEALED UNDER RULE 61G15-23.004, F.A.C.

PROJECT CONTROLS

CONTEXT CLASSIFICATION

( ) C1 : NATURAL
( ) C2 : RURAL
( ) C2T : RURAL TOWN
(X) C3R : SUBURBAN RES.
( ) N/A : L.A. FACILITY
( ) C3C : SUBURBAN COMM.
( ) C4 : URBAN GENERAL
( ) C5 : URBAN CENTER
( ) C6 : URBAN CORE

FUNCTIONAL CLASSIFICATION

( ) INTERSTATE
( ) FREEWAY/EXPWY.
( ) PRINCIPAL ARTERIAL
( ) MINOR ARTERIAL
( ) MAJOR COLLECTOR
( ) MINOR COLLECTOR
(X) LOCAL

HIGHWAY SYSTEM

( ) NATIONAL HIGHWAY SYSTEM
( ) STRATEGIC INTERMODAL SYSTEM
( ) STATE HIGHWAY SYSTEM
(X) OFF-STATE HIGHWAY SYSTEM

ACCESS CLASSIFICATION

( ) 1 - FREEWAY
( ) 2 - RESTRICTIVE w/Service Roads
( ) 3 - RESTRICTIVE w/660 ft. Connection Spacing
( ) 4 - NON-RESTRICTIVE w/2640 ft. Signal Spacing
( ) 5 - RESTRICTIVE w/440 ft. Connection Spacing
( ) 6 - NON-RESTRICTIVE w/1320 ft. Signal Spacing
(X) 7 - BOTH MEDIAN TYPES

CRITERIA

(X) NEW CONSTRUCTION / RECONSTRUCTION
( ) RESURFACING (LA FACILITIES)
( ) RRR (ARTERIALS & COLLECTORS)

POTENTIAL EXCEPTIONS AND VARIATIONS RELATED TO TYPICAL SECTION:

TYPICAL SECTION No. 19

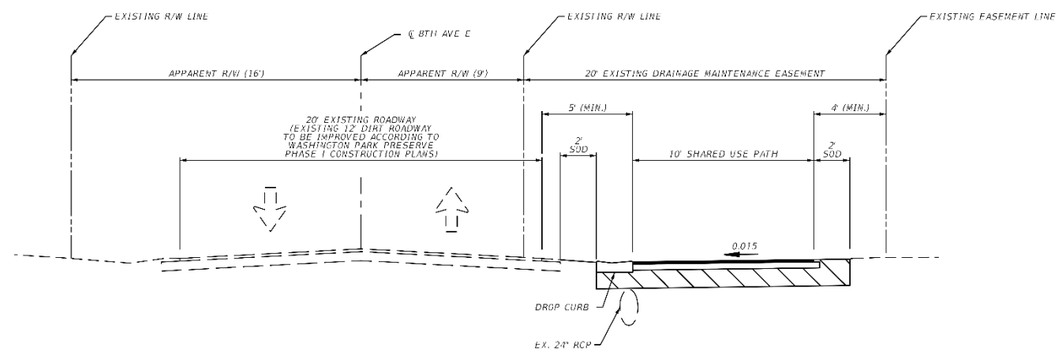

TYPICAL SECTION 19

SEGMENT: G2

SHARED USE PATH DESIGN SPEED: 18 MPH

FINANCIAL PROJECT ID	SHEET NO.
444857-1-22-01	24

THE OFFICIAL RECORD OF THIS SHEET IS THE ELECTRONIC FILE DIGITALLY SIGNED AND SEALED UNDER RULE 61G15-23.004, F.A.C.

Appendix B

Proposed Typical Sections for FPID 444857-1 Palmetto Trails Network PD&E Study in

Manatee County Recommended Alternative for the Southern Section

STATE OF FLORIDA
DEPARTMENT OF TRANSPORTATION

TYPICAL SECTION ANALYSIS

FINANCIAL PROJECT ID 444857-1-22-01

MANATEE COUNTY

PALMETTO TRAILS NETWORK PLAN - SOUTHERN SECTION

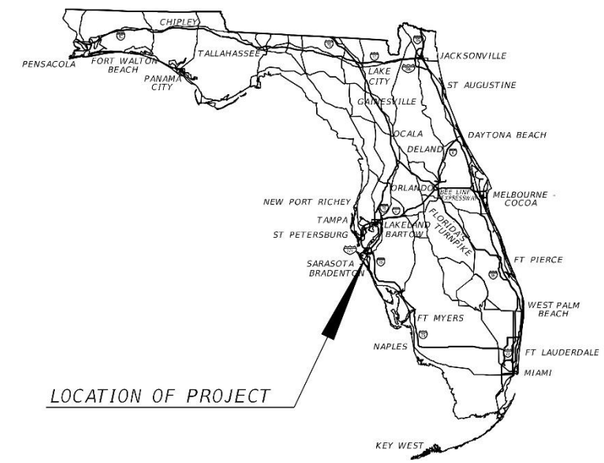

PROJECT LOCATION URL:	NONE
PROJECT LIMITS:	CONNOR PARK TO DR. MARTIN LUTHER KING JR. TRAIL
EXCEPTIONS:	NONE
BRIDGE LIMITS:	NONE
RAILROAD CROSSING:	NONE

NOTE: THIS TYPICAL SECTION ANALYSIS INCLUDES SEGMENTS THAT ARE LOCATED IN STATE, COUNTY, AND CITY RIGHT OF WAYS. AT A LATER DATE, INDIVIDUAL TYPICAL SECTION PACKAGES WILL BE SUBMITTED FOR CONCURRENCE BY EACH AGENCY. SEGMENT LOCATIONS CAN BE FOUND IN THE FIGURES PROVIDED IN THE MEMO.

APPROVED BY: N/A

THEODORE ANTON PETRITSCH
LICENSE
No 48857
STATE OF
FLORIDA
PROFESSIONAL ENGINEER

THE ABOVE NAMED PROFESSIONAL ENGINEER SHALL BE RESPONSIBLE FOR THE FOLLOWING SHEETS IN ACCORDANCE WITH RULE 61G15-23.004, F.A.C.

FDOT DISTRICT DESIGN ENGINEER

CONCURRING WITH:
TYPICAL SECTION ELEMENTS
TARGET SPEED
DESIGN & POSTED SPEEDS

FDOT DISTRICT TRAFFIC OPERATIONS ENGINEER

CONCURRING WITH:
TARGET SPEED
DESIGN & POSTED SPEEDS

FDOT DISTRICT INTERMODAL SYSTEMS DEVELOPMENT MANAGER

CONCURRING WITH:
CONTEXT CLASSIFICATION
TARGET SPEED

FDOT DISTRICT STRUCTURES DESIGN ENGINEER

CONCURRING WITH:
TYPICAL SECTION ELEMENTS

FHWA TRANSPORTATION ENGINEER

CONCURRING WITH:
TYPICAL SECTION ELEMENTS

LOCAL TRANSPORTATION ENGINEER

CONCURRING WITH:
TYPICAL SECTION ELEMENTS

NOT USED

CONCURRING WITH:

NOT USED

CONCURRING WITH:

INDEX OF SHEETS

SHEET NO	SHEET DESCRIPTION
1	TYPICAL SECTION ANALYSIS COVER
2-19	TYPICAL SECTION SHEETS

SHEET NO.
1

2/23/2026 3:23:32 PM KatelynnDunkerson
Z:\Shared\Worksets\FDOT\44485712201\Roadway\TYPDRD01.dgn

PROJECT CONTROLS

CONTEXT CLASSIFICATION

( ) C1 : NATURAL
( ) C2 : RURAL
( ) C2T : RURAL TOWN
( ) C3R : SUBURBAN RES.
( ) N/A : L.A. FACILITY
( ) C3C : SUBURBAN COMM.
(X) C4 : URBAN GENERAL
( ) C5 : URBAN CENTER
( ) C6 : URBAN CORE

FUNCTIONAL CLASSIFICATION

( ) INTERSTATE
( ) FREEWAY/EXPWY.
( ) PRINCIPAL ARTERIAL
( ) MINOR ARTERIAL
( ) MAJOR COLLECTOR
( ) MINOR COLLECTOR
(X) LOCAL

HIGHWAY SYSTEM

( ) NATIONAL HIGHWAY SYSTEM
( ) STRATEGIC INTERMODAL SYSTEM
( ) STATE HIGHWAY SYSTEM
(X) OFF-STATE HIGHWAY SYSTEM

ACCESS CLASSIFICATION

( ) 1 - FREEWAY
( ) 2 - RESTRICTIVE w/Service Roads
( ) 3 - RESTRICTIVE w/660 ft. Connection Spacing
( ) 4 - NON-RESTRICTIVE w/2640 ft. Signal Spacing
( ) 5 - RESTRICTIVE w/440 ft. Connection Spacing
( ) 6 - NON-RESTRICTIVE w/1320 ft. Signal Spacing
(X) 7 - BOTH MEDIAN TYPES

CRITERIA

(X) NEW CONSTRUCTION / RECONSTRUCTION
( ) RESURFACING (LA FACILITIES)
( ) RRR (ARTERIALS & COLLECTORS)

POTENTIAL EXCEPTIONS AND VARIATIONS RELATED TO TYPICAL SECTION:

NONE

TYPICAL SECTION 3A-S

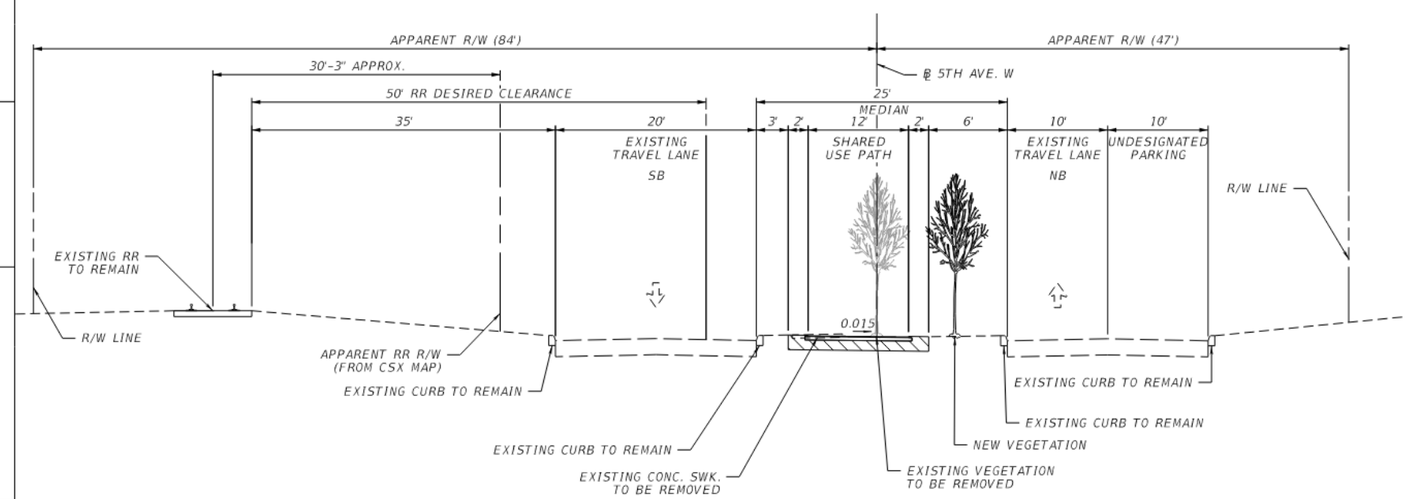

TYPICAL SECTION 3A-S
SEGMENT: S-C1a AND S-C1b
(NTS)

TRAFFIC DATA

POSTED SPEED 30 MPH

NOTES:

1. R/W LINES WERE OBTAINED FROM MANATEE COUNTY'S PROPERTY APPRAISER.
2. APPARENT RR R/W (FROM CSX MAP) OBTAINED FROM DOCUMENT RECIEVED FROM CSX.

FINANCIAL PROJECT ID	SHEET NO.
444857-1-22-01	2

THE OFFICIAL RECORD OF THIS SHEET IS THE ELECTRONIC FILE DIGITALLY SIGNED AND SEALED UNDER RULE 61G15-23.004, F.A.C.

2/23/2026 4:16:50 PM EstebanDanielson
Z:\Shared\Workset\SFDOT\444857122011\Roadway\TYPOR002.dgn

PROJECT CONTROLS

CONTEXT CLASSIFICATION

( ) C1 : NATURAL
( ) C2 : RURAL
( ) C2T : RURAL TOWN
( ) C3R : SUBURBAN RES.
( ) N/A : L.A. FACILITY
( ) C3C : SUBURBAN COMM.
(X) C4 : URBAN GENERAL
( ) C5 : URBAN CENTER
( ) C6 : URBAN CORE

FUNCTIONAL CLASSIFICATION

( ) INTERSTATE
( ) FREEWAY/EXPWY.
( ) PRINCIPAL ARTERIAL
( ) MINOR ARTERIAL
( ) MAJOR COLLECTOR
( ) MINOR COLLECTOR
(X) LOCAL

HIGHWAY SYSTEM

( ) NATIONAL HIGHWAY SYSTEM
( ) STRATEGIC INTERMODAL SYSTEM
( ) STATE HIGHWAY SYSTEM
(X) OFF-STATE HIGHWAY SYSTEM

ACCESS CLASSIFICATION

( ) 1 - FREEWAY
( ) 2 - RESTRICTIVE w/Service Roads
( ) 3 - RESTRICTIVE w/660 ft. Connection Spacing
( ) 4 - NON-RESTRICTIVE w/2640 ft. Signal Spacing
( ) 5 - RESTRICTIVE w/440 ft. Connection Spacing
( ) 6 - NON-RESTRICTIVE w/1320 ft. Signal Spacing
(X) 7 - BOTH MEDIAN TYPES

CRITERIA

(X) NEW CONSTRUCTION / RECONSTRUCTION
( ) RESURFACING (LA FACILITIES)
( ) RRR (ARTERIALS & COLLECTORS)

POTENTIAL EXCEPTIONS AND VARIATIONS RELATED TO TYPICAL SECTION:

NONE

TYPICAL SECTION No. 3B-S

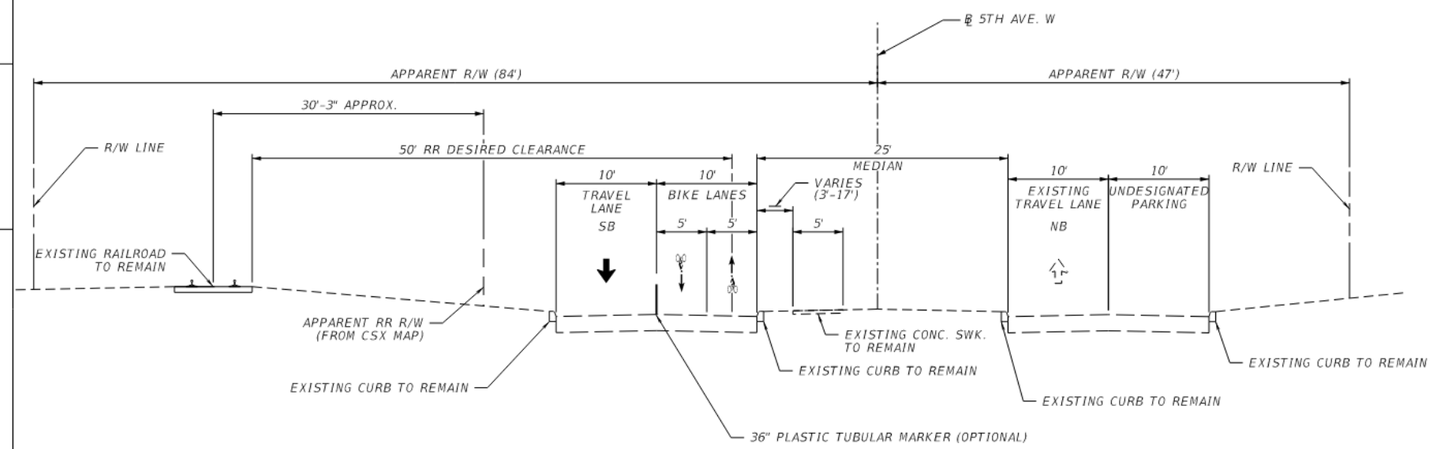

TYPICAL SECTION 3B-S
SEGMENT: S-C1a AND S-C1b
(NTS)

TRAFFIC DATA

POSTED SPEED 30 MPH

NOTES:

1. R/W LINES WERE OBTAINED FROM MANATEE COUNTY'S PROPERTY APPRAISER.
2. APPARENT RR R/W (FROM CSX MAP) OBTAINED FROM DOCUMENT RECIEVED FROM CSX.

FINANCIAL PROJECT ID	SHEET NO.
444857-1-22-01	3

THE OFFICIAL RECORD OF THIS SHEET IS THE ELECTRONIC FILE DIGITALLY SIGNED AND SEALED UNDER RULE 61G15-23.004, F.A.C.

2/23/2026 4:16:50 PM KatelynDunkerson
Z:\Shared\Working\FDOT\444857120\Roadway\TYPROD002.dgn

PROJECT CONTROLS

CONTEXT CLASSIFICATION

( ) C1 : NATURAL
( ) C2 : RURAL
( ) C2T : RURAL TOWN
( ) C3R : SUBURBAN RES.
( ) C3C : SUBURBAN COMM.
(X) C4 : URBAN GENERAL
( ) C5 : URBAN CENTER
( ) C6 : URBAN CORE
( ) N/A : L.A. FACILITY

FUNCTIONAL CLASSIFICATION

( ) INTERSTATE
( ) FREEWAY/EXPWY.
( ) PRINCIPAL ARTERIAL
( ) MINOR ARTERIAL
( ) MAJOR COLLECTOR
( ) MINOR COLLECTOR
(X) LOCAL

HIGHWAY SYSTEM

( ) NATIONAL HIGHWAY SYSTEM
( ) STRATEGIC INTERMODAL SYSTEM
( ) STATE HIGHWAY SYSTEM
(X) OFF-STATE HIGHWAY SYSTEM

ACCESS CLASSIFICATION

( ) 1 - FREEWAY
( ) 2 - RESTRICTIVE w/Service Roads
( ) 3 - RESTRICTIVE w/660 ft. Connection Spacing
( ) 4 - NON-RESTRICTIVE w/2640 ft. Signal Spacing
( ) 5 - RESTRICTIVE w/440 ft. Connection Spacing
( ) 6 - NON-RESTRICTIVE w/1320 ft. Signal Spacing
(X) 7 - BOTH MEDIAN TYPES

CRITERIA

(X) NEW CONSTRUCTION / RECONSTRUCTION
( ) RESURFACING (LA FACILITIES)
( ) RRR (ARTERIALS & COLLECTORS)

POTENTIAL EXCEPTIONS AND VARIATIONS RELATED TO TYPICAL SECTION:

NONE

TYPICAL SECTION No. 3C-S

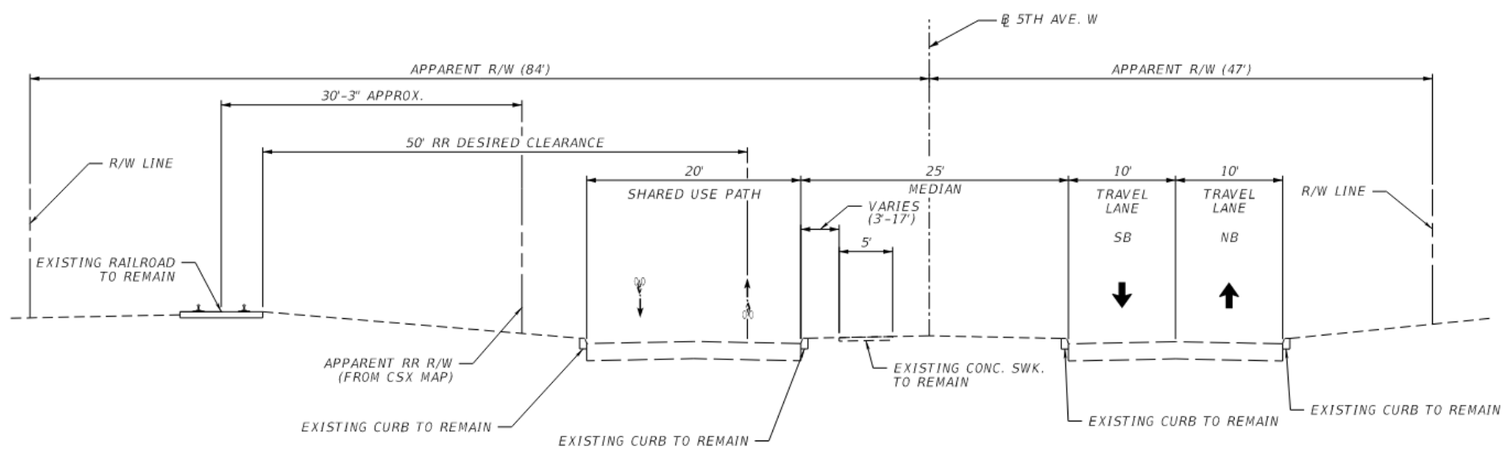

TYPICAL SECTION 3C-S
SEGMENT: S-C1a AND S-C1b
(NTS)

TRAFFIC DATA

POSTED SPEED 30 MPH

NOTES:

1. R/W LINES WERE OBTAINED FROM MANATEE COUNTY'S PROPERTY APPRAISER.
2. APPARENT RR R/W (FROM CSX MAP) OBTAINED FROM DOCUMENT RECIEVED FROM CSX.

FINANCIAL PROJECT ID	SHEET NO.
444857-1-22-01	4

THE OFFICIAL RECORD OF THIS SHEET IS THE ELECTRONIC FILE DIGITALLY SIGNED AND SEALED UNDER RULE 61G15-23.004, F.A.C.

2/23/2026 4:16:51 PM kaleiun@hunterson
Z:\Shared\Work\Jobs\FDOT\444857-1-22-01\Roadway\TYPIC002.dgn

PROJECT CONTROLS

CONTEXT CLASSIFICATION

( ) C1 : NATURAL
( ) C2 : RURAL
( ) C2T : RURAL TOWN
( ) C3R : SUBURBAN RES.
( ) C3C : SUBURBAN COMM.
(X) C4 : URBAN GENERAL
( ) C5 : URBAN CENTER
( ) C6 : URBAN CORE
( ) N/A : L.A. FACILITY

FUNCTIONAL CLASSIFICATION

( ) INTERSTATE
( ) FREEWAY/EXPWY.
( ) PRINCIPAL ARTERIAL
( ) MINOR ARTERIAL
( ) MAJOR COLLECTOR
( ) MINOR COLLECTOR
(X) LOCAL

HIGHWAY SYSTEM

( ) NATIONAL HIGHWAY SYSTEM
( ) STRATEGIC INTERMODAL SYSTEM
( ) STATE HIGHWAY SYSTEM
(X) OFF-STATE HIGHWAY SYSTEM

ACCESS CLASSIFICATION

( ) 1 - FREEWAY
( ) 2 - RESTRICTIVE w/Service Roads
( ) 3 - RESTRICTIVE w/660 ft. Connection Spacing
( ) 4 - NON-RESTRICTIVE w/2640 ft. Signal Spacing
( ) 5 - RESTRICTIVE w/440 ft. Connection Spacing
( ) 6 - NON-RESTRICTIVE w/1320 ft. Signal Spacing
(X) 7 - BOTH MEDIAN TYPES

CRITERIA

(X) NEW CONSTRUCTION / RECONSTRUCTION
( ) RESURFACING (LA FACILITIES)
( ) RRR (ARTERIALS & COLLECTORS)

POTENTIAL EXCEPTIONS AND VARIATIONS RELATED TO TYPICAL SECTION:

TYPICAL SECTION No. 3D-S

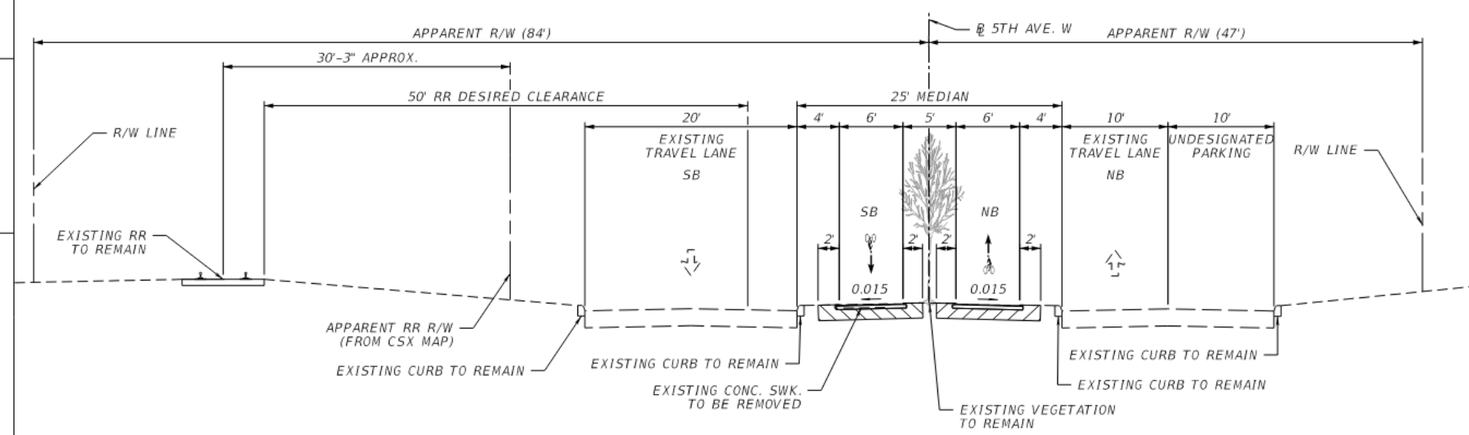

TYPICAL SECTION 3D-S
SEGMENT: S-C1a AND S-C1b
(NTS)

TRAFFIC DATA

POSTED SPEED 30 MPH

NOTES:

1. R/W LINES WERE OBTAINED FROM MANATEE COUNTY'S PROPERTY APPRAISER.
2. APPARENT RR R/W (FROM CSX MAP) OBTAINED FROM DOCUMENT RECIEVED FROM CSX.

FINANCIAL PROJECT ID	SHEET NO.
444857-1-22-01	5

THE OFFICIAL RECORD OF THIS SHEET IS THE ELECTRONIC FILE DIGITALLY SIGNED AND SEALED UNDER RULE 61G15-23.004, F.A.C.

2/23/2026 4:16:41 PM Katelyn Dunkerson
Z:\Shared\Work\ais\FDOT\444857-1-22-01\Roadway\TYP3D02.dgn

PROJECT CONTROLS

CONTEXT CLASSIFICATION

( ) C1 : NATURAL
( ) C2 : RURAL
( ) C2T : RURAL TOWN
( ) C3R : SUBURBAN RES.
( ) N/A : L.A. FACILITY
( ) C3C : SUBURBAN COMM.
(X) C4 : URBAN GENERAL
( ) C5 : URBAN CENTER
( ) C6 : URBAN CORE

FUNCTIONAL CLASSIFICATION

( ) INTERSTATE
( ) FREEWAY/EXPWY.
( ) PRINCIPAL ARTERIAL
( ) MINOR ARTERIAL
( ) MAJOR COLLECTOR
( ) MINOR COLLECTOR
(X) LOCAL

HIGHWAY SYSTEM

( ) NATIONAL HIGHWAY SYSTEM
( ) STRATEGIC INTERMODAL SYSTEM
( ) STATE HIGHWAY SYSTEM
(X) OFF-STATE HIGHWAY SYSTEM

ACCESS CLASSIFICATION

( ) 1 - FREEWAY
( ) 2 - RESTRICTIVE w/Service Roads
( ) 3 - RESTRICTIVE w/660 ft. Connection Spacing
( ) 4 - NON-RESTRICTIVE w/2640 ft. Signal Spacing
( ) 5 - RESTRICTIVE w/440 ft. Connection Spacing
( ) 6 - NON-RESTRICTIVE w/1320 ft. Signal Spacing
(X) 7 - BOTH MEDIAN TYPES

CRITERIA

(X) NEW CONSTRUCTION / RECONSTRUCTION
( ) RESURFACING (LA FACILITIES)
( ) RRR (ARTERIALS & COLLECTORS)

POTENTIAL EXCEPTIONS AND VARIATIONS RELATED TO TYPICAL SECTION:

NONE

TYPICAL SECTION No. 4A-S

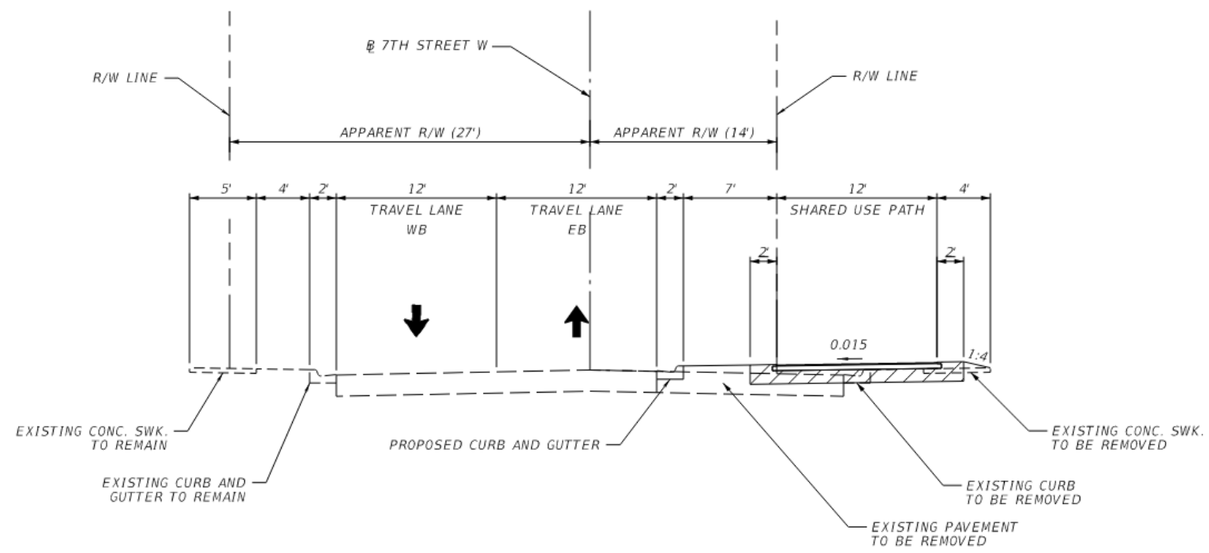

TYPICAL SECTION 4A-S
SEGMENT: S-D1a AND S-D1b
(NTS)

TRAFFIC DATA

POSTED SPEED 35 MPH

NOTES:

1. TYPICAL SECTION PROPOSED IMPROVEMENTS DEVELOPED FROM THE BACK OF EXISTING SIDEWALK.
2. R/W LINES WERE OBTAINED FROM MANATEE COUNTY'S PROPERTY APPRAISER AND DEPICTED AT THE WIDEST LOCATIONS. ACTUAL R/W NEEDED TO DETERMINE IF ADDITIONAL R/W IS REQUIRED TO IMPLEMENT TYPICAL SECTION.
3. DEPENDANT ON EXISTING R/W WIDTHS, THE SHARED USE PATH COULD BE LOCATED ON THE OPPOSITE SIDE OF THE ROADWAY.
4. EXISTING TWO-WAY LEFT TURN LANE WILL BE REMOVED.
5. A LANE REPURPOSING STUDY WILL NEED TO BE CONDUCTED TO IMPLEMENT THIS TYPICAL SECTION.

FINANCIAL PROJECT ID	SHEET NO.
444857-1-22-01	6

THE OFFICIAL RECORD OF THIS SHEET IS THE ELECTRONIC FILE DIGITALLY SIGNED AND SEALED UNDER RULE 61G15-23.004, F.A.C.

2/23/2026 4:16:51 PM Katelyn Dunkerson
Z:\Shared\Worksets\FDOT\444857120\Roadway\TYPRD002.dgn

PROJECT CONTROLS

CONTEXT CLASSIFICATION

( ) C1 : NATURAL
( ) C2 : RURAL
( ) C2T : RURAL TOWN
( ) C3R : SUBURBAN RES.
( ) N/A : L.A. FACILITY
( ) C3C : SUBURBAN COMM.
(X) C4 : URBAN GENERAL
( ) C5 : URBAN CENTER
( ) C6 : URBAN CORE

FUNCTIONAL CLASSIFICATION

( ) INTERSTATE
( ) FREEWAY/EXPWY.
( ) PRINCIPAL ARTERIAL
( ) MINOR ARTERIAL
( ) MAJOR COLLECTOR
( ) MINOR COLLECTOR
(X) LOCAL

HIGHWAY SYSTEM

( ) NATIONAL HIGHWAY SYSTEM
( ) STRATEGIC INTERMODAL SYSTEM
( ) STATE HIGHWAY SYSTEM
(X) OFF-STATE HIGHWAY SYSTEM

ACCESS CLASSIFICATION

( ) 1 - FREEWAY
( ) 2 - RESTRICTIVE w/Service Roads
( ) 3 - RESTRICTIVE w/660 ft. Connection Spacing
( ) 4 - NON-RESTRICTIVE w/2640 ft. Signal Spacing
( ) 5 - RESTRICTIVE w/440 ft. Connection Spacing
( ) 6 - NON-RESTRICTIVE w/1320 ft. Signal Spacing
(X) 7 - BOTH MEDIAN TYPES

CRITERIA

(X) NEW CONSTRUCTION / RECONSTRUCTION
( ) RESURFACING (LA FACILITIES)
( ) RRR (ARTERIALS & COLLECTORS)

POTENTIAL EXCEPTIONS AND VARIATIONS RELATED TO TYPICAL SECTION:

NONE

TYPICAL SECTION No. 4B-S

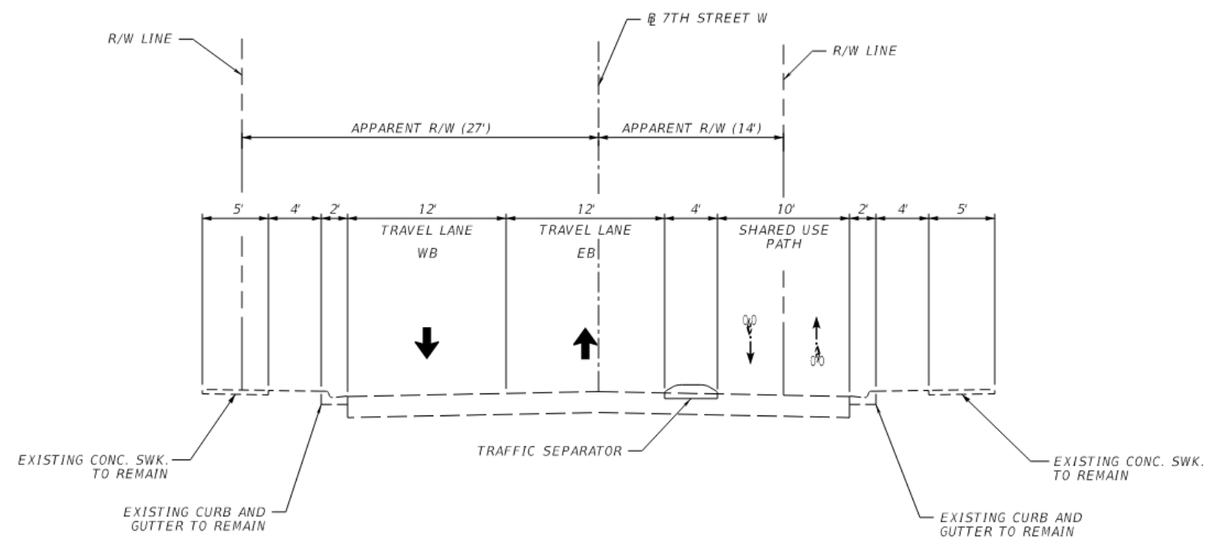

TYPICAL SECTION 4B-S
SEGMENT: S-D1a AND S-D1b
(NTS)

TRAFFIC DATA

POSTED SPEED 35 MPH

NOTES:

1. R/W LINES WERE OBTAINED FROM MANATEE COUNTY'S PROPERTY APPRAISER AND DEPICTED AT THE WIDEST LOCATIONS. ACTUAL R/W NEEDED TO DETERMINE IF ADDITIONAL R/W IS REQUIRED TO IMPLEMENT TYPICAL SECTION.
2. EXISTING TWO-WAY LEFT TURN LANE TO BE REMOVED.
3. TRAFFIC SEPARATOR WILL BE DESIGNED TO ACCOMMODATE EXISTING DRIVEWAYS AND PAVEMENT SURFACE DRAINAGE.
4. A LANE REPURPOSING STUDY WILL NEED TO BE CONDUCTED TO IMPLEMENT THIS TYPICAL SECTION.

FINANCIAL PROJECT ID	SHEET NO.
444857-1-22-01	7

THE OFFICIAL RECORD OF THIS SHEET IS THE ELECTRONIC FILE DIGITALLY SIGNED AND SEALED UNDER RULE 61G15-23.004, F.A.C.

2/23/2026 4:16:52 PM KathleenDunkerson
Z:\Shared\Projects\FDOT\444857-1-22-01\Roadway\TYPD002.dgn

PROJECT CONTROLS

CONTEXT CLASSIFICATION

( ) C1 : NATURAL
( ) C2 : RURAL
( ) C2T : RURAL TOWN
( ) C3R : SUBURBAN RES.
( ) C3C : SUBURBAN COMM.
(X) C4 : URBAN GENERAL
( ) C5 : URBAN CENTER
( ) C6 : URBAN CORE
( ) N/A : L.A. FACILITY

FUNCTIONAL CLASSIFICATION

( ) INTERSTATE
( ) FREEWAY/EXPWY.
( ) PRINCIPAL ARTERIAL
( ) MINOR ARTERIAL
( ) MAJOR COLLECTOR
( ) MINOR COLLECTOR
(X) LOCAL

HIGHWAY SYSTEM

( ) NATIONAL HIGHWAY SYSTEM
( ) STRATEGIC INTERMODAL SYSTEM
( ) STATE HIGHWAY SYSTEM
(X) OFF-STATE HIGHWAY SYSTEM

ACCESS CLASSIFICATION

( ) 1 - FREEWAY
( ) 2 - RESTRICTIVE w/Service Roads
( ) 3 - RESTRICTIVE w/660 ft. Connection Spacing
( ) 4 - NON-RESTRICTIVE w/2640 ft. Signal Spacing
( ) 5 - RESTRICTIVE w/440 ft. Connection Spacing
( ) 6 - NON-RESTRICTIVE w/1320 ft. Signal Spacing
(X) 7 - BOTH MEDIAN TYPES

CRITERIA

(X) NEW CONSTRUCTION / RECONSTRUCTION
( ) RESURFACING (LA FACILITIES)
( ) RRR (ARTERIALS & COLLECTORS)

POTENTIAL EXCEPTIONS AND VARIATIONS RELATED TO TYPICAL SECTION:

NONE

TYPICAL SECTION No. 5A-S

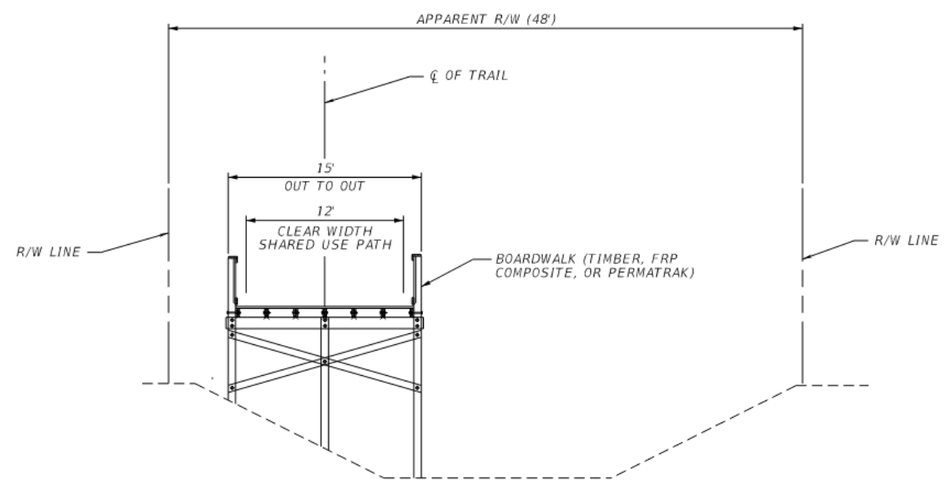

TYPICAL SECTION 5A-S
SEGMENT: S-E1a AND S-E1b
(NTS)

FINANCIAL PROJECT ID	SHEET NO.
444857-1-22-01	8

THE OFFICIAL RECORD OF THIS SHEET IS THE ELECTRONIC FILE DIGITALLY SIGNED AND SEALED UNDER RULE 61G15-23.004, F.A.C.

2/23/2026 4:16:52 PM KatelynDunkerson
Z:\Shared\Work\445857\FDOT-444857-1-2013\Roadway\TYP0002.dgn

PROJECT CONTROLS

CONTEXT CLASSIFICATION

( ) C1 : NATURAL
( ) C2 : RURAL
( ) C2T : RURAL TOWN
( ) C3R : SUBURBAN RES.
( ) C3C : SUBURBAN COMM.
(X) C4 : URBAN GENERAL
( ) C5 : URBAN CENTER
( ) C6 : URBAN CORE
( ) N/A : L.A. FACILITY

FUNCTIONAL CLASSIFICATION

( ) INTERSTATE
( ) FREEWAY/EXPWY.
( ) PRINCIPAL ARTERIAL
( ) MINOR ARTERIAL
( ) MAJOR COLLECTOR
( ) MINOR COLLECTOR
(X) LOCAL

HIGHWAY SYSTEM

( ) NATIONAL HIGHWAY SYSTEM
( ) STRATEGIC INTERMODAL SYSTEM
( ) STATE HIGHWAY SYSTEM
(X) OFF-STATE HIGHWAY SYSTEM

ACCESS CLASSIFICATION

( ) 1 - FREEWAY
( ) 2 - RESTRICTIVE w/Service Roads
( ) 3 - RESTRICTIVE w/660 ft. Connection Spacing
( ) 4 - NON-RESTRICTIVE w/2640 ft. Signal Spacing
( ) 5 - RESTRICTIVE w/440 ft. Connection Spacing
( ) 6 - NON-RESTRICTIVE w/1320 ft. Signal Spacing
(X) 7 - BOTH MEDIAN TYPES

CRITERIA

(X) NEW CONSTRUCTION / RECONSTRUCTION
( ) RESURFACING (LA FACILITIES)
( ) RRR (ARTERIALS & COLLECTORS)

POTENTIAL EXCEPTIONS AND VARIATIONS RELATED TO TYPICAL SECTION:

NONE

TYPICAL SECTION No. 5B-S

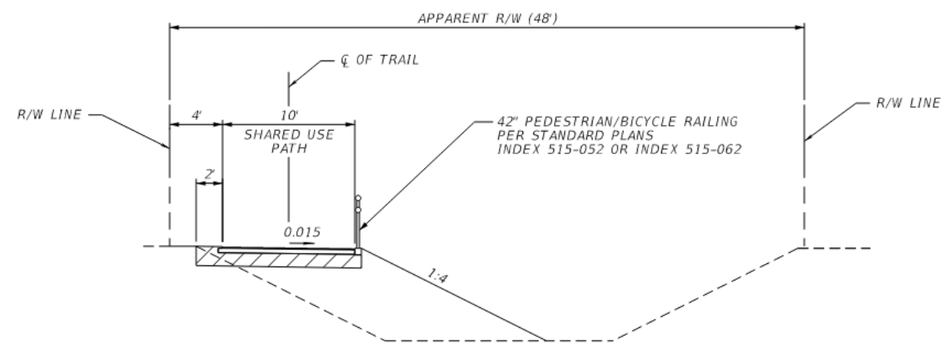

TYPICAL SECTION 5B-S
SEGMENT: S-E1a AND S-E1b
(NTS)

NOTE:

1. SWALE WIDTH ANTICIPATED TO MATCH MIDDLE AND NORTHERN SECTIONS.
2. CANAL/DITCH WOULD NEED TO BE RESHAPED TO MAINTAIN VOLUME/CONVEYANCE.

FINANCIAL PROJECT ID	SHEET NO.
444857-1-22-01	9

THE OFFICIAL RECORD OF THIS SHEET IS THE ELECTRONIC FILE DIGITALLY SIGNED AND SEALED UNDER RULE 61G15-23.004, F.A.C.

2/23/2026 4:16:52 PM kathleenDunkerson
Z:\Shared\Worksheets\FDOT\444857122011\Sheetlibs\TYPICAL02.dgn

PROJECT CONTROLS

CONTEXT CLASSIFICATION

( ) C1 : NATURAL
( ) C2 : RURAL
( ) C2T : RURAL TOWN
( ) C3R : SUBURBAN RES.
( ) C3C : SUBURBAN COMM.
(X) C4 : URBAN GENERAL
( ) C5 : URBAN CENTER
( ) C6 : URBAN CORE
( ) N/A : L.A. FACILITY

FUNCTIONAL CLASSIFICATION

( ) INTERSTATE
( ) FREEWAY/EXPWY.
( ) PRINCIPAL ARTERIAL
( ) MINOR ARTERIAL
( ) MAJOR COLLECTOR
( ) MINOR COLLECTOR
(X) LOCAL

HIGHWAY SYSTEM

( ) NATIONAL HIGHWAY SYSTEM
( ) STRATEGIC INTERMODAL SYSTEM
( ) STATE HIGHWAY SYSTEM
(X) OFF-STATE HIGHWAY SYSTEM

ACCESS CLASSIFICATION

( ) 1 - FREEWAY
( ) 2 - RESTRICTIVE w/Service Roads
( ) 3 - RESTRICTIVE w/660 ft. Connection Spacing
( ) 4 - NON-RESTRICTIVE w/2640 ft. Signal Spacing
( ) 5 - RESTRICTIVE w/440 ft. Connection Spacing
( ) 6 - NON-RESTRICTIVE w/1320 ft. Signal Spacing
(X) 7 - BOTH MEDIAN TYPES

CRITERIA

(X) NEW CONSTRUCTION / RECONSTRUCTION
( ) RESURFACING (LA FACILITIES)
( ) RRR (ARTERIALS & COLLECTORS)

POTENTIAL EXCEPTIONS AND VARIATIONS RELATED TO TYPICAL SECTION:

NONE

TYPICAL SECTION No. 6A-S

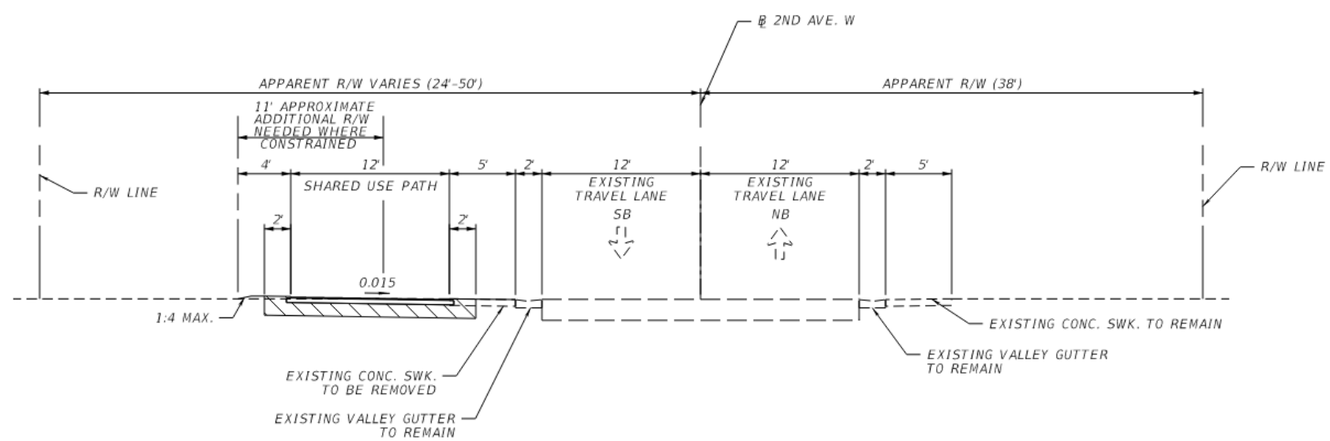

TYPICAL SECTION 6A-S
SEGMENT: S-F1
(NTS)

TRAFFIC DATA:

POSTED SPEED 25 MPH

NOTES:

1. R/W DEPICTED AT THE WIDEST LOCATIONS. ADDITIONAL R/W MAY BE REQUIRED TO IMPLEMENT TYPICAL SECTION.
2. R/W LINES WERE OBTAINED FROM MANATEE COUNTY'S PROPERTY APPRAISER.
3. DEPENDANT ON EXISTING R/W WIDTHS, THE SHARED USE PATH COULD BE LOCATED ON THE OPPOSITE SIDE OF THE ROADWAY.

FINANCIAL PROJECT ID	SHEET NO.
444857-1-22-01	10

THE OFFICIAL RECORD OF THIS SHEET IS THE ELECTRONIC FILE DIGITALLY SIGNED AND SEALED UNDER RULE 61G15-23.004, F.A.C.

2/23/2026 4:16:54 PM KatelynnDunkerson
Z:\Shared\Worksets\FDOT\444857\12201\Roadway\TYPDRD01.dgn

PROJECT CONTROLS

CONTEXT CLASSIFICATION

( ) C1 : NATURAL
( ) C2 : RURAL
( ) C2T : RURAL TOWN
( ) C3R : SUBURBAN RES.
( ) N/A : L.A. FACILITY
( ) C3C : SUBURBAN COMM.
(X) C4 : URBAN GENERAL
( ) C5 : URBAN CENTER
( ) C6 : URBAN CORE

FUNCTIONAL CLASSIFICATION

( ) INTERSTATE
( ) FREEWAY/EXPWY.
( ) PRINCIPAL ARTERIAL
( ) MINOR ARTERIAL
( ) MAJOR COLLECTOR
( ) MINOR COLLECTOR
(X) LOCAL

HIGHWAY SYSTEM

( ) NATIONAL HIGHWAY SYSTEM
( ) STRATEGIC INTERMODAL SYSTEM
( ) STATE HIGHWAY SYSTEM
(X) OFF-STATE HIGHWAY SYSTEM

ACCESS CLASSIFICATION

( ) 1 - FREEWAY
( ) 2 - RESTRICTIVE w/Service Roads
( ) 3 - RESTRICTIVE w/660 ft. Connection Spacing
( ) 4 - NON-RESTRICTIVE w/2640 ft. Signal Spacing
( ) 5 - RESTRICTIVE w/440 ft. Connection Spacing
( ) 6 - NON-RESTRICTIVE w/1320 ft. Signal Spacing
(X) 7 - BOTH MEDIAN TYPES

CRITERIA

(X) NEW CONSTRUCTION / RECONSTRUCTION
( ) RESURFACING (LA FACILITIES)
( ) RRR (ARTERIALS & COLLECTORS)

POTENTIAL EXCEPTIONS AND VARIATIONS RELATED TO TYPICAL SECTION:

NONE

TYPICAL SECTION No. 6B-S

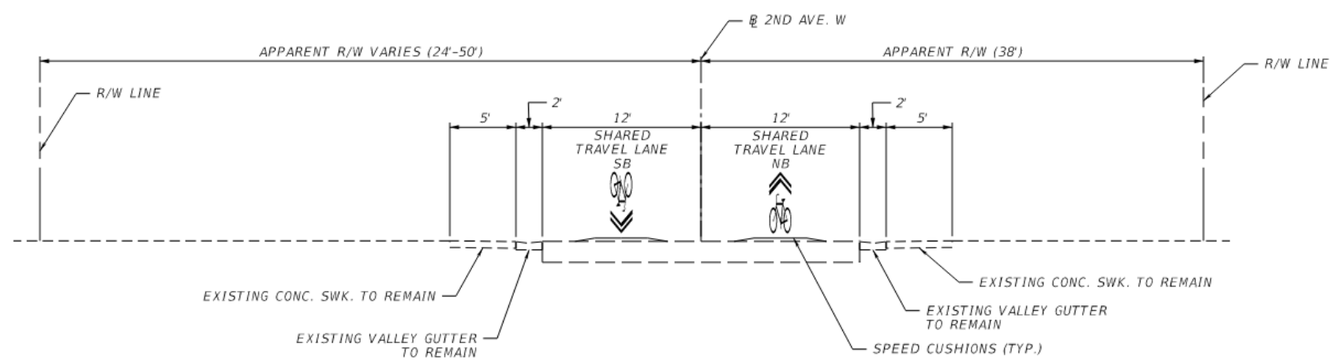

TYPICAL SECTION 6B-S
SEGMENT: S-F1
(NTS)

TRAFFIC DATA:

POSTED SPEED 25 MPH

NOTES:

1. R/W DEPICTED AT THE WIDEST LOCATIONS. ADDITIONAL R/W MAY BE REQUIRED TO IMPLEMENT TYPICAL SECTION.
2. R/W LINES WERE OBTAINED FROM MANATEE COUNTY'S PROPERTY APPRAISER.

FINANCIAL PROJECT ID	SHEET NO.
444857-1-22-01	11

THE OFFICIAL RECORD OF THIS SHEET IS THE ELECTRONIC FILE DIGITALLY SIGNED AND SEALED UNDER RULE 61G15-23.004, F.A.C.

2/23/2026 4:16:54 PM KaitlynnDunkerson
Z:\Sharept\Worksets\FDOT\444857122\01\Roadway\TYPDR001.dgn

PROJECT CONTROLS

CONTEXT CLASSIFICATION

( ) C1 : NATURAL
( ) C2 : RURAL
( ) C2T : RURAL TOWN
( ) C3R : SUBURBAN RES.
( ) N/A : L.A. FACILITY
( ) C3C : SUBURBAN COMM.
(X) C4 : URBAN GENERAL
( ) C5 : URBAN CENTER
( ) C6 : URBAN CORE

FUNCTIONAL CLASSIFICATION

( ) INTERSTATE
( ) FREEWAY/EXPWY.
( ) PRINCIPAL ARTERIAL
( ) MINOR ARTERIAL
( ) MAJOR COLLECTOR
( ) MINOR COLLECTOR
(X) LOCAL

HIGHWAY SYSTEM

( ) NATIONAL HIGHWAY SYSTEM
( ) STRATEGIC INTERMODAL SYSTEM
( ) STATE HIGHWAY SYSTEM
(X) OFF-STATE HIGHWAY SYSTEM

ACCESS CLASSIFICATION

( ) 1 - FREEWAY
( ) 2 - RESTRICTIVE w/Service Roads
( ) 3 - RESTRICTIVE w/660 ft. Connection Spacing
( ) 4 - NON-RESTRICTIVE w/2640 ft. Signal Spacing
( ) 5 - RESTRICTIVE w/440 ft. Connection Spacing
( ) 6 - NON-RESTRICTIVE w/1320 ft. Signal Spacing
(X) 7 - BOTH MEDIAN TYPES

CRITERIA

(X) NEW CONSTRUCTION / RECONSTRUCTION
( ) RESURFACING (LA FACILITIES)
( ) RRR (ARTERIALS & COLLECTORS)

POTENTIAL EXCEPTIONS AND VARIATIONS RELATED TO TYPICAL SECTION:

VARIATION FOR RR 50' CLEARANCE REQUIREMENT
(SIDEWALK CURRENTLY WITHIN CLEARANCE)

TYPICAL SECTION No. 7-S

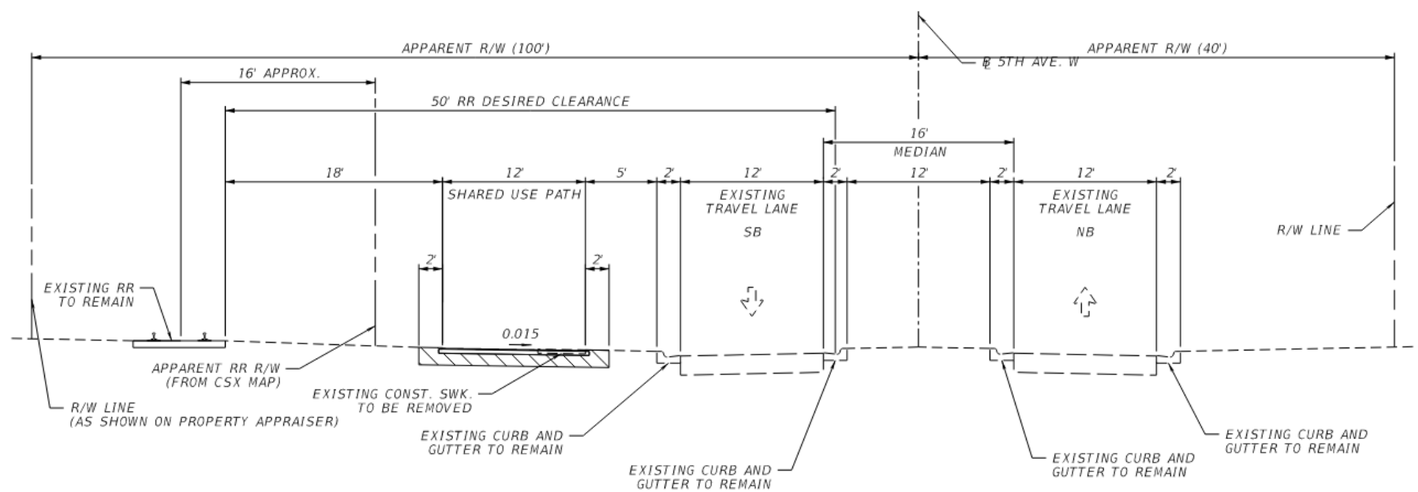

TYPICAL SECTION 7-S
SEGMENT: S-D2 AND S-E6
(NTS)

TRAFFIC DATA:

POSTED SPEED 30 MPH

NOTES:

1. R/W LINES WERE OBTAINED FROM MANATEE COUNTY'S PROPERTY APPRAISER.
2. APPARENT RR R/W (FROM CXS MAP) OBTAINED FROM DOCUMENT RECIEVED FROM CXS.

FINANCIAL PROJECT ID	SHEET NO.
444857-1-22-01	12

THE OFFICIAL RECORD OF THIS SHEET IS THE ELECTRONIC FILE DIGITALLY SIGNED AND SEALED UNDER RULE 61G15-23.004, F.A.C.

2/23/2026 4:16:54 PM KaKelynnDunkerson
Z:\Shared\Worksets\FDOT\444857122\01\Roadway\TYPDR001.dgn

PROJECT CONTROLS

CONTEXT CLASSIFICATION

( ) C1 : NATURAL
( ) C2 : RURAL
( ) C2T : RURAL TOWN
( ) C3R : SUBURBAN RES.
( ) C3C : SUBURBAN COMM.
(X) C4 : URBAN GENERAL
( ) C5 : URBAN CENTER
( ) C6 : URBAN CORE
( ) N/A : L.A. FACILITY

FUNCTIONAL CLASSIFICATION

( ) INTERSTATE
( ) FREEWAY/EXPWY.
( ) PRINCIPAL ARTERIAL
( ) MINOR ARTERIAL
( ) MAJOR COLLECTOR
( ) MINOR COLLECTOR
(X) LOCAL

HIGHWAY SYSTEM

( ) NATIONAL HIGHWAY SYSTEM
( ) STRATEGIC INTERMODAL SYSTEM
( ) STATE HIGHWAY SYSTEM
(X) OFF-STATE HIGHWAY SYSTEM

ACCESS CLASSIFICATION

( ) 1 - FREEWAY
( ) 2 - RESTRICTIVE w/Service Roads
( ) 3 - RESTRICTIVE w/660 ft. Connection Spacing
( ) 4 - NON-RESTRICTIVE w/2640 ft. Signal Spacing
( ) 5 - RESTRICTIVE w/440 ft. Connection Spacing
( ) 6 - NON-RESTRICTIVE w/1320 ft. Signal Spacing
(X) 7 - BOTH MEDIAN TYPES

CRITERIA

(X) NEW CONSTRUCTION / RECONSTRUCTION
( ) RESURFACING (LA FACILITIES)
( ) RRR (ARTERIALS & COLLECTORS)

POTENTIAL EXCEPTIONS AND VARIATIONS RELATED TO TYPICAL SECTION:

VARIATION FOR RR 50' CLEARANCE REQUIREMENT
(SIDEWALK CURRENTLY WITHIN CLEARANCE)

TYPICAL SECTION No. 8-S

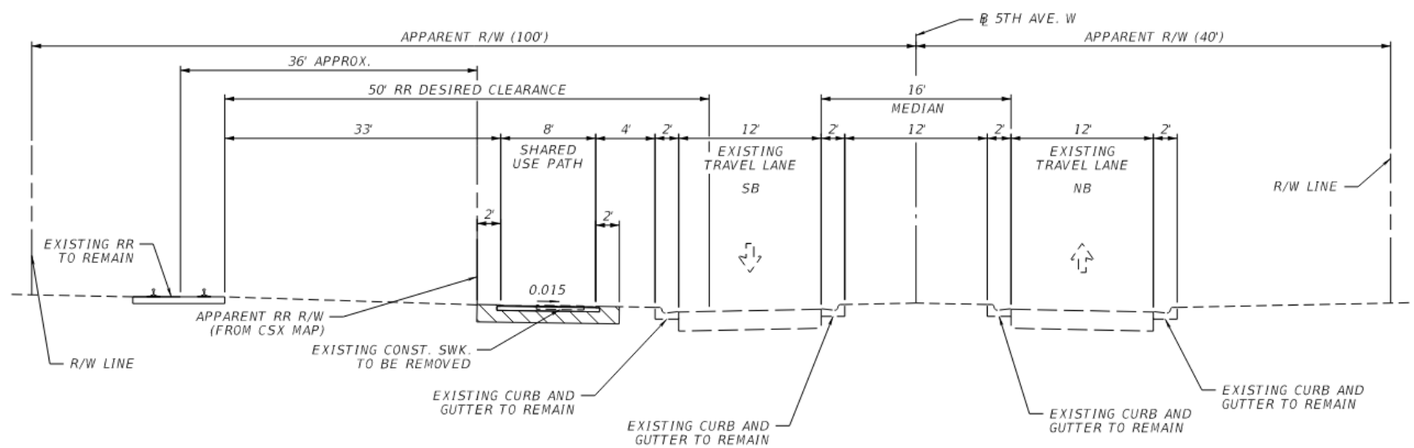

TYPICAL SECTION 8-S
SEGMENT: S-E5
(NTS)

TRAFFIC DATA:

POSTED SPEED 30 MPH

NOTES:

1. R/W LINES WERE OBTAINED FROM MANATEE COUNTY'S PROPERTY APPRAISER.
2. APPARENT RR R/W (FROM CXS MAP) OBTAINED FROM DOCUMENT RECIEVED FROM CXS.

FINANCIAL PROJECT ID	SHEET NO.
444857-1-22-01	13

THE OFFICIAL RECORD OF THIS SHEET IS THE ELECTRONIC FILE DIGITALLY SIGNED AND SEALED UNDER RULE 61G15-23.004, F.A.C.

2/23/2026 4:16:55 PM KatelynnDunkerson
Z:\Shared\Worksets\FDOT\444857122011\Roadway\TYPDRD01.dgn

PROJECT CONTROLS

CONTEXT CLASSIFICATION

( ) C1 : NATURAL
( ) C2 : RURAL
( ) C2T : RURAL TOWN
( ) C3R : SUBURBAN RES.
( ) N/A : L.A. FACILITY
( ) C3C : SUBURBAN COMM.
(X) C4 : URBAN GENERAL
( ) C5 : URBAN CENTER
( ) C6 : URBAN CORE

FUNCTIONAL CLASSIFICATION

( ) INTERSTATE
( ) FREEWAY/EXPWY.
( ) PRINCIPAL ARTERIAL
( ) MINOR ARTERIAL
( ) MAJOR COLLECTOR
( ) MINOR COLLECTOR
(X) LOCAL

HIGHWAY SYSTEM

( ) NATIONAL HIGHWAY SYSTEM
( ) STRATEGIC INTERMODAL SYSTEM
( ) STATE HIGHWAY SYSTEM
(X) OFF-STATE HIGHWAY SYSTEM

ACCESS CLASSIFICATION

( ) 1 - FREEWAY
( ) 2 - RESTRICTIVE w/Service Roads
( ) 3 - RESTRICTIVE w/660 ft. Connection Spacing
( ) 4 - NON-RESTRICTIVE w/2640 ft. Signal Spacing
( ) 5 - RESTRICTIVE w/440 ft. Connection Spacing
( ) 6 - NON-RESTRICTIVE w/1320 ft. Signal Spacing
(X) 7 - BOTH MEDIAN TYPES

CRITERIA

(X) NEW CONSTRUCTION / RECONSTRUCTION
( ) RESURFACING (LA FACILITIES)
( ) RRR (ARTERIALS & COLLECTORS)

POTENTIAL EXCEPTIONS AND VARIATIONS RELATED TO TYPICAL SECTION:

VARIATION FOR RR 50' CLEARANCE REQUIREMENT.

TYPICAL SECTION No. 9-S

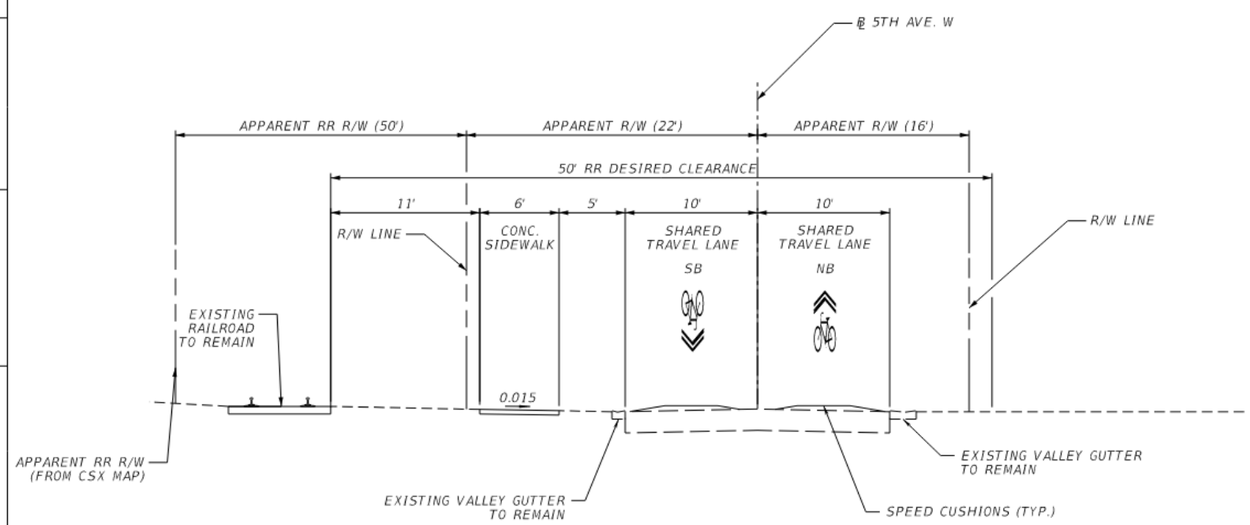

TYPICAL SECTION 9-S
SEGMENT: S-E7
(NTS)

TRAFFIC DATA:

POSTED SPEED 15 MPH

NOTES:

1. R/W DEPICTED AT THE WIDEST LOCATIONS. ADDITIONAL R/W MAY BE REQUIRED TO IMPLEMENT TYPICAL SECTION.
2. R/W LINES WERE OBTAINED FROM MANATEE COUNTY'S PROPERTY APPRAISER.
3. COORDINATION WITH CSX MAY BE REQUIRED.

FINANCIAL PROJECT ID	SHEET NO.
444857-1-22-01	14

THE OFFICIAL RECORD OF THIS SHEET IS THE ELECTRONIC FILE DIGITALLY SIGNED AND SEALED UNDER RULE 61G15-23.004, F.A.C.

2/23/2026 4:16:55 PM KaKelynnDunkerson
Z:\Shared\Worksets\FDOT\444857122\01\Roadway\TYPDRN001.dgn

PROJECT CONTROLS

CONTEXT CLASSIFICATION

( ) C1 : NATURAL
( ) C2 : RURAL
( ) C2T : RURAL TOWN
( ) C3R : SUBURBAN RES.
( ) N/A : L.A. FACILITY
( ) C3C : SUBURBAN COMM.
(X) C4 : URBAN GENERAL
( ) C5 : URBAN CENTER
( ) C6 : URBAN CORE

FUNCTIONAL CLASSIFICATION

( ) INTERSTATE
( ) FREEWAY/EXPWY.
( ) PRINCIPAL ARTERIAL
( ) MINOR ARTERIAL
( ) MAJOR COLLECTOR
( ) MINOR COLLECTOR
(X) LOCAL

HIGHWAY SYSTEM

( ) NATIONAL HIGHWAY SYSTEM
( ) STRATEGIC INTERMODAL SYSTEM
( ) STATE HIGHWAY SYSTEM
(X) OFF-STATE HIGHWAY SYSTEM

ACCESS CLASSIFICATION

( ) 1 - FREEWAY
( ) 2 - RESTRICTIVE w/Service Roads
( ) 3 - RESTRICTIVE w/660 ft. Connection Spacing
( ) 4 - NON-RESTRICTIVE w/2640 ft. Signal Spacing
( ) 5 - RESTRICTIVE w/440 ft. Connection Spacing
( ) 6 - NON-RESTRICTIVE w/1320 ft. Signal Spacing
(X) 7 - BOTH MEDIAN TYPES

CRITERIA

(X) NEW CONSTRUCTION / RECONSTRUCTION
( ) RESURFACING (LA FACILITIES)
( ) RRR (ARTERIALS & COLLECTORS)

POTENTIAL EXCEPTIONS AND VARIATIONS RELATED TO TYPICAL SECTION:

NONE

TYPICAL SECTION Nos. 10-S

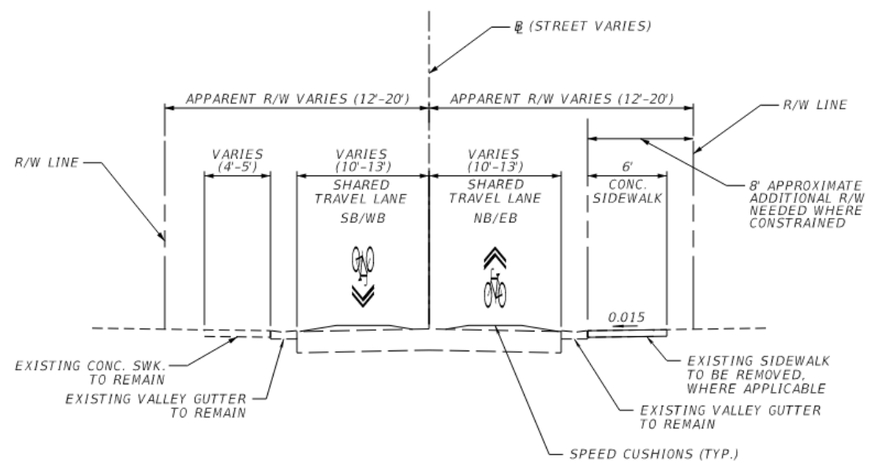

TYPICAL SECTION 10-S

SEGMENT: S-D3, S-D4, S-E2, S-E3, S-E4, S-G1, S-G2, AND S-G3
(NTS)

TRAFFIC DATA:

POSTED SPEED
15 MPH S-E4
25 MPH S-D3, S-D4, S-G2, S-G3
30 MPH S-E2
35 MPH S-E3

NOTES:

1. R/W DEPICTED AT THE WIDEST LOCATIONS. ADDITIONAL R/W MAY BE REQUIRED TO IMPLEMENT TYPICAL SECTION.
2. R/W LINES WERE OBTAINED FROM MANATEE COUNTY'S PROPERTY APPRAISER.
3. SEGMENTS S-D3, S-D4, S-E2, S-E3, AND S-G3 MAY BE ABLE TO ACCOMMODATE SIDEWALK IMPROVEMENTS WITHIN THE EXISTING BUFFERS.

FINANCIAL PROJECT ID	SHEET NO.
444857-1-22-01	15

THE OFFICIAL RECORD OF THIS SHEET IS THE ELECTRONIC FILE DIGITALLY SIGNED AND SEALED UNDER RULE 61G15-23.004, F.A.C.

2/23/2026 4:16:56 PM KaKelynnDunkerson
Z:\Shared\Worksets\FDOT\444857122\01\Roadway\TYPDRD01.dgn

PROJECT CONTROLS

CONTEXT CLASSIFICATION

( ) C1 : NATURAL
( ) C2 : RURAL
( ) C2T : RURAL TOWN
( ) C3R : SUBURBAN RES.
( ) C3C : SUBURBAN COMM.
(X) C4 : URBAN GENERAL
( ) C5 : URBAN CENTER
( ) C6 : URBAN CORE
( ) N/A : L.A. FACILITY

FUNCTIONAL CLASSIFICATION

( ) INTERSTATE
( ) FREEWAY/EXPWY.
( ) PRINCIPAL ARTERIAL
( ) MINOR ARTERIAL
( ) MAJOR COLLECTOR
( ) MINOR COLLECTOR
(X) LOCAL

HIGHWAY SYSTEM

( ) NATIONAL HIGHWAY SYSTEM
( ) STRATEGIC INTERMODAL SYSTEM
( ) STATE HIGHWAY SYSTEM
(X) OFF-STATE HIGHWAY SYSTEM

ACCESS CLASSIFICATION

( ) 1 - FREEWAY
( ) 2 - RESTRICTIVE w/Service Roads
( ) 3 - RESTRICTIVE w/660 ft. Connection Spacing
( ) 4 - NON-RESTRICTIVE w/2640 ft. Signal Spacing
( ) 5 - RESTRICTIVE w/440 ft. Connection Spacing
( ) 6 - NON-RESTRICTIVE w/1320 ft. Signal Spacing
(X) 7 - BOTH MEDIAN TYPES

CRITERIA

(X) NEW CONSTRUCTION / RECONSTRUCTION
( ) RESURFACING (LA FACILITIES)
( ) RRR (ARTERIALS & COLLECTORS)

POTENTIAL EXCEPTIONS AND VARIATIONS RELATED TO TYPICAL SECTION:

VARIATION NEEDED FOR RR 50' CLEARANCE REQUIREMENT.
(SIDEWALK CURRENTLY WITHIN CLEARANCE)

TYPICAL SECTION No. 11-S

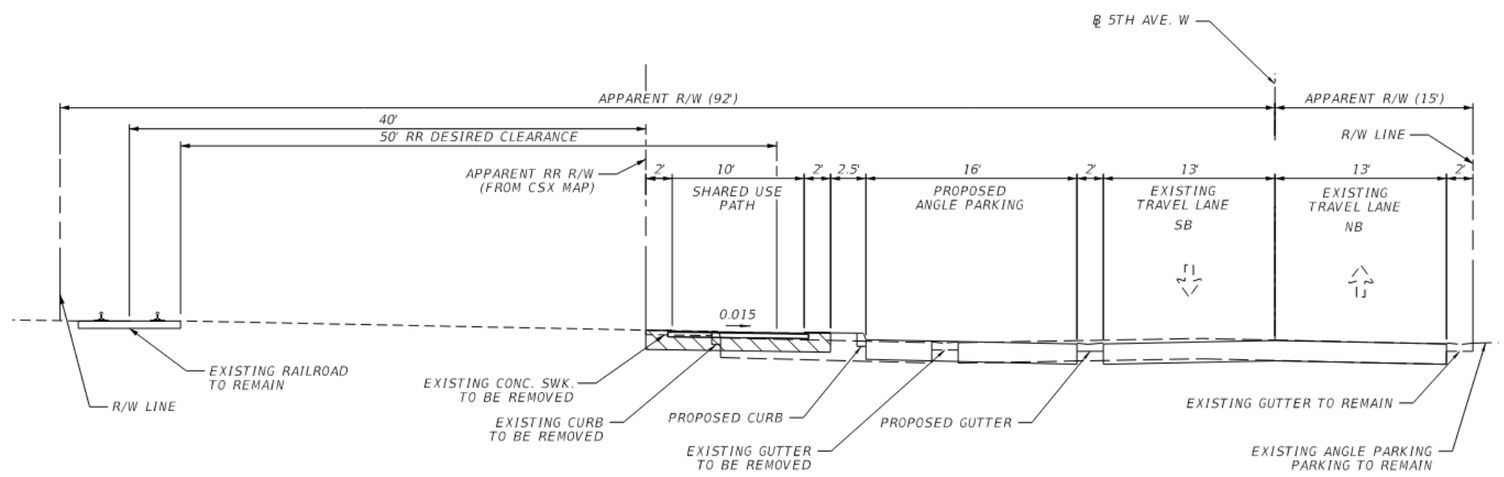

TYPICAL SECTION 11-S
SEGMENT: S-E6
(NTS)

TRAFFIC DATA:

POSTED SPEED 30 MPH

NOTES:

1. R/W LINES WERE OBTAINED FROM MANATEE COUNTY'S PROPERTY APPRAISER.
2. APPARENT RR R/W (FROM CSX MAP) OBTAINED FROM DOCUMENT RECIEVED FROM CSX.

FINANCIAL PROJECT ID	SHEET NO.
444857-1-22-01	16

THE OFFICIAL RECORD OF THIS SHEET IS THE ELECTRONIC FILE DIGITALLY SIGNED AND SEALED UNDER RULE 61G15-23.004, F.A.C.

2/23/2026 4:16:56 PM KatelynnDunkerson
Z:\Shared\Worksets\FDOT\444857120\Roadway\TYPDRD01.dgn

PROJECT CONTROLS

CONTEXT CLASSIFICATION

( ) C1 : NATURAL
( ) C2 : RURAL
( ) C2T : RURAL TOWN
( ) C3R : SUBURBAN RES.
( ) C3C : SUBURBAN COMM.
(X) C4 : URBAN GENERAL
( ) C5 : URBAN CENTER
( ) C6 : URBAN CORE
( ) N/A : L.A. FACILITY

FUNCTIONAL CLASSIFICATION

( ) INTERSTATE
( ) FREEWAY/EXPWY.
( ) PRINCIPAL ARTERIAL
( ) MINOR ARTERIAL
( ) MAJOR COLLECTOR
( ) MINOR COLLECTOR
(X) LOCAL

HIGHWAY SYSTEM

( ) NATIONAL HIGHWAY SYSTEM
( ) STRATEGIC INTERMODAL SYSTEM
( ) STATE HIGHWAY SYSTEM
(X) OFF-STATE HIGHWAY SYSTEM

ACCESS CLASSIFICATION

( ) 1 - FREEWAY
( ) 2 - RESTRICTIVE w/Service Roads
( ) 3 - RESTRICTIVE w/660 ft. Connection Spacing
( ) 4 - NON-RESTRICTIVE w/2640 ft. Signal Spacing
( ) 5 - RESTRICTIVE w/440 ft. Connection Spacing
( ) 6 - NON-RESTRICTIVE w/1320 ft. Signal Spacing
(X) 7 - BOTH MEDIAN TYPES

CRITERIA

(X) NEW CONSTRUCTION / RECONSTRUCTION
( ) RESURFACING (LA FACILITIES)
( ) RRR (ARTERIALS & COLLECTORS)

POTENTIAL EXCEPTIONS AND VARIATIONS RELATED TO TYPICAL SECTION:

NONE

TYPICAL SECTION No. 12-S

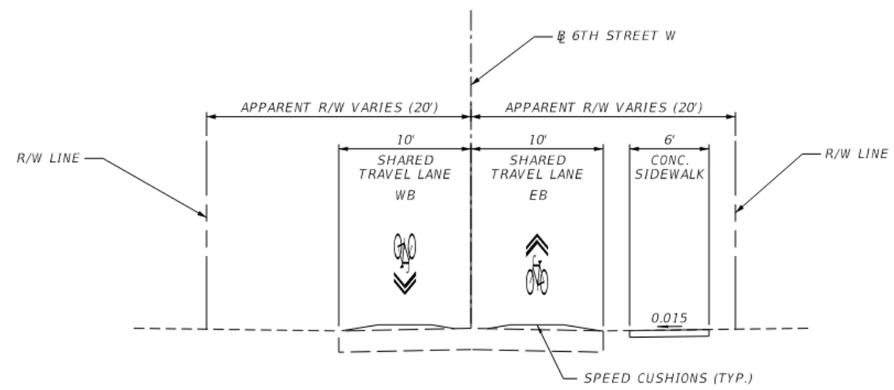

TYPICAL SECTION 12-S
SEGMENT: S-D5
(NTS)

TRAFFIC DATA:

POSTED SPEED 30 MPH

NOTES:

1. R/W DEPICTED AT THE WIDEST LOCATIONS. ADDITIONAL R/W MAY BE REQUIRED TO IMPLEMENT TYPICAL SECTION.
2. R/W LINES WERE OBTAINED FROM MANATEE COUNTY'S PROPERTY APPRAISER.

FINANCIAL PROJECT ID	SHEET NO.
444857-1-22-01	17

THE OFFICIAL RECORD OF THIS SHEET IS THE ELECTRONIC FILE DIGITALLY SIGNED AND SEALED UNDER RULE 61G15-23.004, F.A.C.

2/23/2026 4:16:56 PM KatelynDunkerson
Z:\Shared Worksets\FDOT\444857120\1\Roadway\TYPDR001.dgn

PROJECT CONTROLS

CONTEXT CLASSIFICATION

( ) C1 : NATURAL
( ) C2 : RURAL
( ) C2T : RURAL TOWN
( ) C3R : SUBURBAN RES.
( ) C3C : SUBURBAN COMM.
(X) C4 : URBAN GENERAL
( ) C5 : URBAN CENTER
( ) C6 : URBAN CORE
( ) N/A : L.A. FACILITY

FUNCTIONAL CLASSIFICATION

( ) INTERSTATE
( ) FREEWAY/EXPWY.
( ) PRINCIPAL ARTERIAL
( ) MINOR ARTERIAL
( ) MAJOR COLLECTOR
( ) MINOR COLLECTOR
(X) LOCAL

HIGHWAY SYSTEM

( ) NATIONAL HIGHWAY SYSTEM
( ) STRATEGIC INTERMODAL SYSTEM
( ) STATE HIGHWAY SYSTEM
(X) OFF-STATE HIGHWAY SYSTEM

ACCESS CLASSIFICATION

( ) 1 - FREEWAY
( ) 2 - RESTRICTIVE w/Service Roads
( ) 3 - RESTRICTIVE w/660 ft. Connection Spacing
( ) 4 - NON-RESTRICTIVE w/2640 ft. Signal Spacing
( ) 5 - RESTRICTIVE w/440 ft. Connection Spacing
( ) 6 - NON-RESTRICTIVE w/1320 ft. Signal Spacing
(X) 7 - BOTH MEDIAN TYPES

CRITERIA

(X) NEW CONSTRUCTION / RECONSTRUCTION
( ) RESURFACING (LA FACILITIES)
( ) RRR (ARTERIALS & COLLECTORS)

POTENTIAL EXCEPTIONS AND VARIATIONS RELATED TO TYPICAL SECTION:

NONE

TYPICAL SECTION No. 13-S

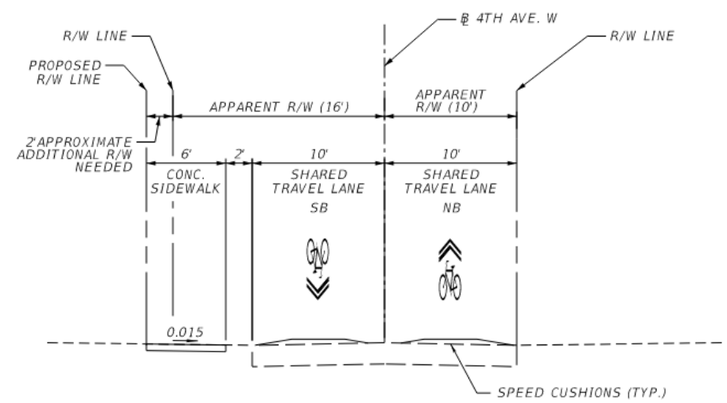

TYPICAL SECTION 13-S
SEGMENT: S-D6
(NTS)

TRAFFIC DATA:

POSTED SPEED 30 MPH

NOTES:

1. R/W DEPICTED AT THE WIDEST LOCATIONS. ADDITIONAL R/W WILL BE REQUIRED TO IMPLEMENT TYPICAL SECTION.
2. R/W LINES WERE OBTAINED FROM MANATEE COUNTY'S PROPERTY APPRAISER.

FINANCIAL PROJECT ID	SHEET NO.
444857-1-22-01	18

THE OFFICIAL RECORD OF THIS SHEET IS THE ELECTRONIC FILE DIGITALLY SIGNED AND SEALED UNDER RULE 61G15-23.004, F.A.C.

2/23/2026 4:16:56 PM KatelynDunkerson
Z:\Shared\Worksets\FDOT\444857120\Roadway\TYPDR001.dgn

PROJECT CONTROLS

CONTEXT CLASSIFICATION

( ) C1 : NATURAL
( ) C2 : RURAL
( ) C2T : RURAL TOWN
( ) C3R : SUBURBAN RES.
( ) N/A : L.A. FACILITY
( ) C3C : SUBURBAN COMM.
(X) C4 : URBAN GENERAL
( ) C5 : URBAN CENTER
( ) C6 : URBAN CORE

FUNCTIONAL CLASSIFICATION

( ) INTERSTATE
( ) FREEWAY/EXPWY.
( ) PRINCIPAL ARTERIAL
( ) MINOR ARTERIAL
( ) MAJOR COLLECTOR
( ) MINOR COLLECTOR
(X) LOCAL

HIGHWAY SYSTEM

( ) NATIONAL HIGHWAY SYSTEM
( ) STRATEGIC INTERMODAL SYSTEM
( ) STATE HIGHWAY SYSTEM
(X) OFF-STATE HIGHWAY SYSTEM

ACCESS CLASSIFICATION

( ) 1 - FREEWAY
( ) 2 - RESTRICTIVE w/Service Roads
( ) 3 - RESTRICTIVE w/660 ft. Connection Spacing
( ) 4 - NON-RESTRICTIVE w/2640 ft. Signal Spacing
( ) 5 - RESTRICTIVE w/440 ft. Connection Spacing
( ) 6 - NON-RESTRICTIVE w/1320 ft. Signal Spacing
(X) 7 - BOTH MEDIAN TYPES

CRITERIA

(X) NEW CONSTRUCTION / RECONSTRUCTION
( ) RESURFACING (LA FACILITIES)
( ) RRR (ARTERIALS & COLLECTORS)

POTENTIAL EXCEPTIONS AND VARIATIONS RELATED TO TYPICAL SECTION:

NONE

TYPICAL SECTION No. 14-S

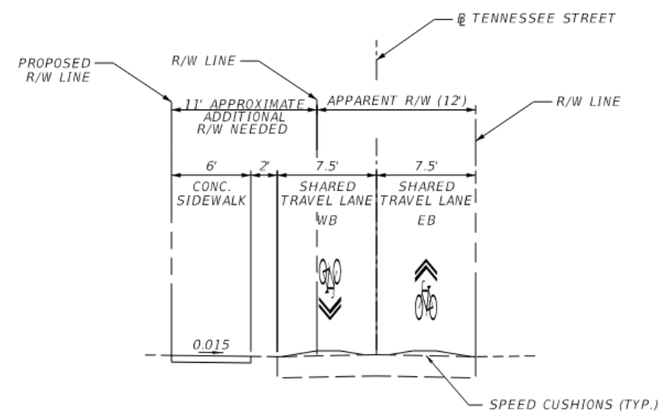

TYPICAL SECTION 14-S

SEGMENT: S-D7
(NTS)

TRAFFIC DATA:

POSTED SPEED 30 MPH

NOTES:

1. R/W DEPICTED AT THE WIDEST LOCATIONS. ADDITIONAL R/W MAY BE REQUIRED TO IMPLEMENT TYPICAL SECTION.
2. R/W LINES WERE OBTAINED FROM MANATEE COUNTY'S PROPERTY APPRAISER.

FINANCIAL PROJECT ID	SHEET NO.
444857-1-22-01	19

THE OFFICIAL RECORD OF THIS SHEET IS THE ELECTRONIC FILE DIGITALLY SIGNED AND SEALED UNDER RULE 61G15-23.004, F.A.C.

2/23/2026 4:16:57 PM KatelynnDunkerson
Z:\Shared Worksets\FDOT\444857120\1\Roadway\TYPDR001.dgn